محاضرة الدكتور/مصطفى الشبينـــى

chapter 10
Transient stability studies

10.1 Introduction

Transient stability studies provide information related to the capability of a power system to remain in synchronism during major disturbances resulting from either the loss of generating or transmission facilities, sudden or sustained load changes, or momentary faults. Specifically, these studies provide the changes in the voltages, currents, powers, speeds, and torques of the machines of the power system, as well as the changes in system voltages and power flows, during and immediately following a disturbance. The degree of stability of a power system is an important factor in the planning of new facilities. In order to provide the reliability required by the dependence on continuous electric service, it is necessary that power systems be designed to be stable under any conceivable disturbance.

The ac network analyzer was used for transient stability studies to obtain the operating performance of the power network during a disturbance. The step-by-step calculations describing the operation of the machines were performed manually. The use of the digital computer to perform all computation for both the network and the machines was a natural extension of the digital load flow studies that proved so successful.

The performance of the power system during the transient period can be obtained from the network performance equations. The performance equation using the bus frame of reference in either the impedance or admittance form has been used in transient stability calculations.

In transient stability studies a load flow calculation is made first to obtain system conditions prior to the disturbance. In this calculation the network is composed of system buses, transmission lines, and trans-

formers. The network representation for transient stability studies includes, in addition to these components, equivalent circuits for machines and static impedances or admittances to ground for loads. After the load flow calculation, therefore, the impedance or admittance matrix of the network must be modified to reflect the changes in the representation of the network.

The operating characteristics of synchronous and induction machines are described by sets of differential equations. The number of differential equations required for a machine depends on the detail needed to represent accurately the machine performance. Two first-order differential equations are required for the simplest representation of a synchronous machine.

A transient stability analysis is performed by combining a solution of the algebraic equations describing the network with a numerical solution of the differential equations. The solution of the network equations retains the identity of the system and thereby provides access to system voltages and currents during the transient period. The modified Euler and Runge-Kutta methods have been applied to the solution of the differential equations in transient stability studies.

10.2 Swing equation

In order to determine the angular displacement between the machines of a power system during transient conditions, it is necessary to solve the differential equation describing the motion of the machine rotors. The net torque acting on the rotor of a machine, from the laws of mechanics related to rotating bodies, is

$$T = \frac{WR^2}{g}\alpha \tag{10.2.1}$$

where T = algebraic sum of all torques, ft-lb
WR^2 = moment of inertia, lb-ft^2
g = acceleration due to gravity, equal to 32.2 ft/sec^2
α = mechanical angular acceleration, rad/sec^2

The electrical angle θ_e is equal to the product of the mechanical angle θ_m and the number of pairs of poles $P/2$, that is,

$$\theta_e = \frac{P}{2}\theta_m \tag{10.2.2}$$

The frequency f in cycles per second is

$$f = \frac{P}{2}\frac{\text{rpm}}{60} \tag{10.2.3}$$

Then from equations (10.2.2) and (10.2.3) the electrical angle in radians is

$$\theta_e = \frac{60f}{\text{rpm}}\,\theta_m \tag{10.2.4}$$

The electrical angular position δ, in radians, of the rotor with respect to a synchronously rotating reference axis is

$$\delta = \theta_e - \omega_0 t$$

where ω_0 = rated synchronous speed, rad/sec
t = time, sec

Then, the angular velocity or slip with respect to the reference axis is

$$\frac{d\delta}{dt} = \frac{d\theta_e}{dt} - \omega_0$$

and the angular acceleration is

$$\frac{d^2\delta}{dt^2} = \frac{d^2\theta_e}{dt^2}$$

Taking the second derivative of equation (10.2.4) and substituting,

$$\frac{d^2\delta}{dt^2} = \frac{60f}{\text{rpm}}\,\frac{d^2\theta_m}{dt^2}$$

where

$$\frac{d^2\theta_m}{dt^2} = \alpha$$

Then, substituting into equation (10.2.1), the net torque is

$$T = \frac{WR^2}{g}\,\frac{\text{rpm}}{60f}\,\frac{d^2\delta}{dt^2}$$

It is desirable to express the torque in per unit. The base torque is defined as the torque required to develop rated power at rated speed, that is,

$$\text{Base torque} = \frac{\text{base kva}\left(\dfrac{550}{0.746}\right)}{2\pi\left(\dfrac{\text{rpm}}{60}\right)}$$

where the base torque is in foot-pounds. Therefore, the torque in per unit is

$$T = \frac{\dfrac{WR^2}{g}\,\dfrac{2\pi}{f}\left(\dfrac{\text{rpm}}{60}\right)^2\dfrac{0.746}{550}}{\text{base kva}}\,\frac{d^2\delta}{dt^2} \tag{10.2.5}$$

The inertia constant H of a machine is defined as the kinetic energy at rated speed in kilowatt seconds per kilovolt-ampere. The kinetic energy in foot-pounds is

$$\text{Kinetic energy} = \frac{1}{2}\frac{WR^2}{g}\omega_0^2$$

where

$$\omega_0 = 2\pi\frac{\text{rpm}}{60}$$

and rpm is the rated speed. Therefore

$$H = \frac{\frac{1}{2}\frac{WR^2}{g}(2\pi)^2\left(\frac{\text{rpm}}{60}\right)^2\frac{0.746}{550}}{\text{base kva}}$$

Substituting in equation (10.2.5),

$$T = \frac{H}{\pi f}\frac{d^2\delta}{dt^2} \tag{10.2.6}$$

The torques acting on the rotor of a generator include the mechanical input torque from the prime mover, torques due to rotational losses (friction, windage, and core losses), electrical output torques, and damping torques due to prime mover, generator, and power system. The electrical and mechanical torques acting on the rotor of a motor are of opposite sign and are a result of the electrical input and mechanical load. Neglecting damping and rotational losses, the accelerating torque T_a is

$$T_a = T_m - T_e$$

where T_m = mechanical torque
T_e = electrical air gap torque

Thus equation (10.2.6) becomes

$$\frac{H}{\pi f}\frac{d^2\delta}{dt^2} = T_m - T_e \tag{10.2.7}$$

Since the torque and power in per unit are equal for small deviations in speed, equation (10.2.7) becomes

$$\frac{d^2\delta}{dt^2} = \frac{\pi f}{H}(P_m - P_e)$$

where P_m = mechanical power
P_e = electrical air gap power

This second-order differential equation can be written as two simultaneous first-order equations:

$$\frac{d^2\delta}{dt^2} = \frac{d\omega}{dt} = \frac{\pi f}{H}(P_m - P_e)$$

and

$$\frac{d\delta}{dt} = \frac{d\theta_e}{dt} - \omega_0 \tag{10.2.8}$$

Since the rated synchronous speed in radians per second is $2\pi f$, equation (10.2.8) becomes

$$\frac{d\delta}{dt} = \omega - 2\pi f$$

10.3 Machine equations

Synchronous machines

In transient stability studies, particularly those involving short periods of analysis in the order of a second or less, a synchronous machine can be represented by a voltage source, in back of transient reactance, that is constant in magnitude but changes its angular position. This representation neglects the effect of saliency and assumes constant flux linkages and a small change in speed. The voltage back of transient reactance is determined from

$$E' = E_t + r_a I_t + x'_d I_t$$

where E' = voltage back of transient reactance
E_t = machine terminal voltage
I_t = machine terminal current
r_a = armature resistance
x'_d = transient reactance

The representation of the synchronous machine used for network solutions and the corresponding phasor diagram are shown in Fig. 10.1.

Saliency and changes in field flux linkages can be taken into account by representing the effects of the three-phase ac quantities of a synchronous machine by components acting along the direct and quadrature axes. The direct axis is along the centerline of the machine pole and the quadrature axis leads the direct axis by 90 electrical degrees. The position of the quadrature axis can be determined by calculating a fictitious voltage located on this axis. This is a voltage back of quadrature-axis

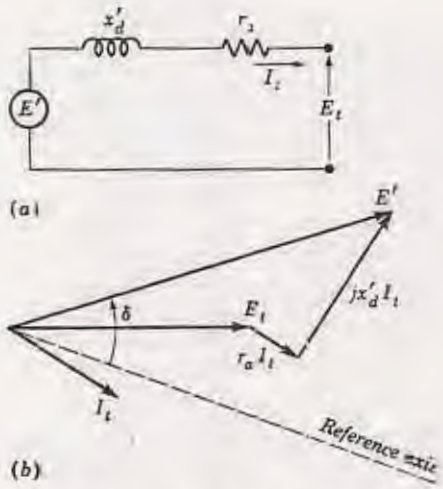

Fig. 10.1 Simplified representation of a synchronous machine. (a) Equivalent circuit; (b) phasor diagram.

synchronous reactance and is determined from

$$E_q = E_t + r_a I_t + jx_q I_t$$

where E_q = voltage back of quadrature-axis synchronous reactance
x_q = quadrature-axis synchronous reactance

The representation of the synchronous machine used for network solutions and the corresponding phasor diagram are shown in Fig. 10.2.

The sinusoidal flux produced by the field current acts along the direct axis. The voltage induced by field current lags this flux by 90° and, therefore, is on the quadrature axis. This voltage can be determined by adding to the terminal voltage E_t the voltage drop across the armature resistance and the voltage drops representing the demagnetizing effects along the direct and quadrature axes. Then neglecting saturation,

$$E_I = E_t + r_a I_t + jx_d I_d + jx_q I_q$$

where E_I = voltage proportional to field current
x_d = direct-axis synchronous reactance
x_q = quadrature-axis synchronous reactance
I_d = direct-axis component of machine terminal current
I_q = quadrature-axis component of machine terminal current

The phasor diagram showing E_I as well as the voltage back of transient reactance is shown in Fig. 10.3.

The quadrature component of voltage back of transient reactance from the phasor diagram is

$$E'_q = E_q - j(x_q - x'_d)I_d$$

where E'_q is the voltage proportional to the field flux linkages resulting from the combined effect of the field and armature currents. Since the field flux linkages do not change instantaneously following a disturbance, E'_q also does not change instantaneously. The rate of change of E'_q along the quadrature axis is dependent on the field voltage controlled by the regulator and exciter, the voltage proportional to the field current, and the direct-axis transient open circuit time constant and is given by

$$\frac{dE'_q}{dt} = \frac{1}{T'_{d0}}(E_{fd} - E_I)$$

where E_{fd} = term representing the field voltage acting along the quadrature axis

T'_{d0} = direct-axis transient open circuit time constant

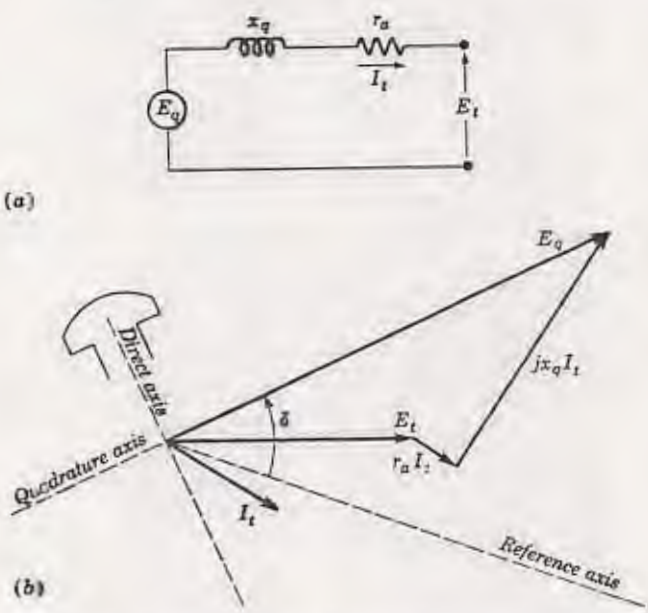

***Fig. 10.2** Representation of a synchronous machine for determining E_q. (a) Equivalent circuit; (b) phasor diagram.*

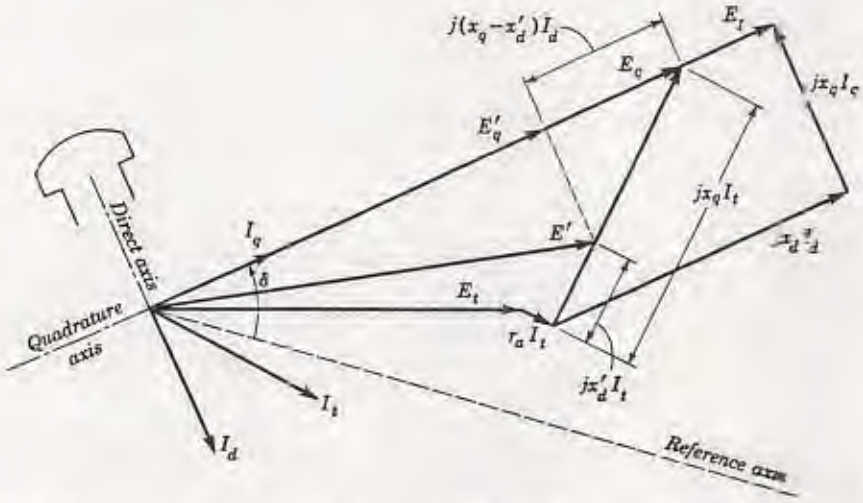

Fig. 10.3 Phasor diagram for determining the quadrature-axis component of voltage behind transient reactance.

Induction machines

In power system transient stability studies loads, including induction motors, usually can be represented adequately by shunt impedances. However, in studies involving large induction motor loads it is necessary frequently to represent the induction motors in a more detailed manner. Induction motors are used extensively in industrial processes and can have significant effects on the transient response of a power system.

A reasonable linear representation of an induction machine can be obtained by taking into account the effects of mechanical transients and rotor electrical transients. The effects of stator electrical transients on system response usually can be neglected. The equivalent circuit shown in Fig. 10.4 has been used to represent the transient behavior of an induction motor including the effects of mechanical transients and rotor electrical transients with a single time constant.

The differential equation describing the rate of change of the voltage behind transient reactance X' is

$$\frac{dE'}{dt} = -j2\pi fsE' - \frac{1}{T_0}\{E' - j(X - X')I_t\}$$

where the rotor open circuit time constant T_0 in seconds is

$$T_0 = \frac{x_r + x_m}{2\pi f r_r}$$

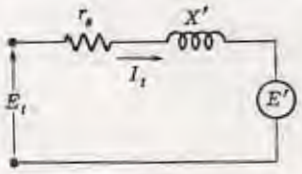

Fig. 10.4 Simplified representation of an induction machine for transient analysis.

and the terminal current is

$$I_t = (E_t - E')\frac{1}{r_s + jX'}$$

The reactances X and X' can be obtained from the conventional steady state equivalent circuit of an induction machine as shown in Fig. 10.5, where

r_s is the stator resistance in per unit
x_s is the stator reactance in per unit
r_r is the rotor resistance in per unit
x_r is the rotor reactance in per unit
x_m is the magnetizing reactance in per unit
s is the rotor slip in per unit

The resistances and reactances are all on the same kva base. The ratio of the base voltages of the stator and rotor is equal to the open circuit voltage ratio at standstill. The per unit slip is

$$s = \frac{\text{Synchronous speed} - \text{actual speed}}{\text{Synchronous speed}}$$

Since the rotor resistance r_r is small compared with the reactances, it can be neglected in the calculation of X and X'. From the steady state equivalent circuit, then, the open circuit reactance is approximately

$$X = x_s + x_m$$

The blocked rotor reactance is approximately

$$X' = x_s + \frac{x_m x_r}{x_m + x_r}$$

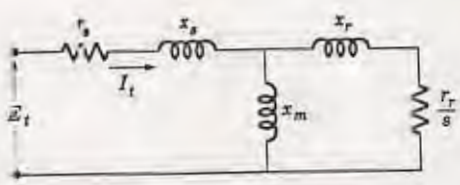

Fig. 10.5 Steady state positive sequence equivalent circuit of an induction machine.

10.4 Power system equations

Representation of loads

Power system loads, other than motors represented by equivalent circuits, can be treated in several ways during the transient period. The commonly used representations are either static impedance or admittance to ground, constant current at fixed power factor, constant real and reactive power, or a combination of these representations.

The constant power load is either equal to the scheduled real and reactive bus load or is a percentage of the specified values in the case of a combined representation. The parameters associated with static impedance and constant current representations are obtained from the scheduled bus loads and the bus voltages calculated from a load flow solution for the power system prior to a disturbance. The initial value of the current for a constant current representation is obtained from

$$I_{p0} = \frac{P_{Lp} - jQ_{Lp}}{E_p^*}$$

where P_{Lp} and Q_{Lp} are the scheduled bus loads and E_p is the calculated bus voltage. The current I_{p0} flows from bus p to ground, that is to bus 0. The magnitude and power factor angle of I_{p0} remain constant.

The static admittance y_{p0}, used to represent the load at bus p, can be obtained from

$$(E_p - E_0)y_{p0} = I_{p0}$$

where E_p is the calculated bus voltage and E_0 is the ground voltage, equal to zero. Therefore

$$y_{p0} = \frac{I_{p0}}{E_p} \tag{10.4.1}$$

Multiplying both the dividend and divisor of equation (10.4.1) by E_p^* and separating the real and imaginary components,

$$g_{p0} = \frac{P_{Lp}}{e_p^2 + f_p^2} \quad \text{and} \quad b_{p0} = \frac{Q_{Lp}}{e_p^2 + f_p^2}$$

where

$$y_{p0} = g_{p0} - jb_{p0}$$

Network performance equations

The network performance equations used for load flow calculations can be applied to describe the performance of the network during a transient

period (Stagg, Gabrielle, Moore, and Hohenstein 1959). Using the bus admittance matrix with ground as reference, the voltage equation for bus p is

$$E_p = \frac{(P_p - jQ_p)L_p}{E_p^*} - \sum_{\substack{q=1 \\ q \neq p}}^{n} YL_{pq}E_q \tag{10.4.2}$$

The term $P_p - jQ_p/E_p^*$ in equation (10.4.2) represents the load current at bus p. For the constant current load representation

$$\frac{P_p - jQ_p}{(E_p^k)^*} = |I_{p0}|\underline{/\theta_p^k + \phi_p}$$

where ϕ_p is the power factor angle and θ_p^k is the angle of voltage with respect to the reference. When the constant power is used to represent the load, $(P_p - jQ_p)L_p$ will be constant but the bus voltage E_p will change every iteration. When the load at bus p is represented by a static admittance to ground, the impressed current at the bus is zero and therefore

$$\frac{(P_p - jQ_p)L_p}{E_p^*} = 0$$

In using equation (10.4.2) to describe the performance of the network for a transient analysis, the parameters must be modified to include the effects of the equivalent elements required to represent synchronous and induction machines and loads. The line parameters YL_{pq} must be modified for the new elements and an additional line parameter must be calculated for each new network element. The system shown in Fig. 10.6, which was used also to illustrate the load flow solution techniques in Sec. 8.3, has two machines and a load at each bus. Representing all loads as static admittances to ground, the voltage equation for bus 1 is

$$E_1 = -YL_{12}E_2 - YL_{13}E_3 - YL_{14}E_4 - YL_{10}E_0$$

where $YL_{12} = Y_{12}L_1$
$YL_{13} = Y_{13}L_1$
$YL_{14} = Y_{14}L_1$

The elements Y_{12}, Y_{13}, and Y_{14} from the bus admittance matrix of the network are the same as in the load flow representation. However,

$$L_1 = \frac{1}{Y_{11}}$$

where

$$Y_{11} = y_{12} + y_{13} + y_{14} + y_{10}$$

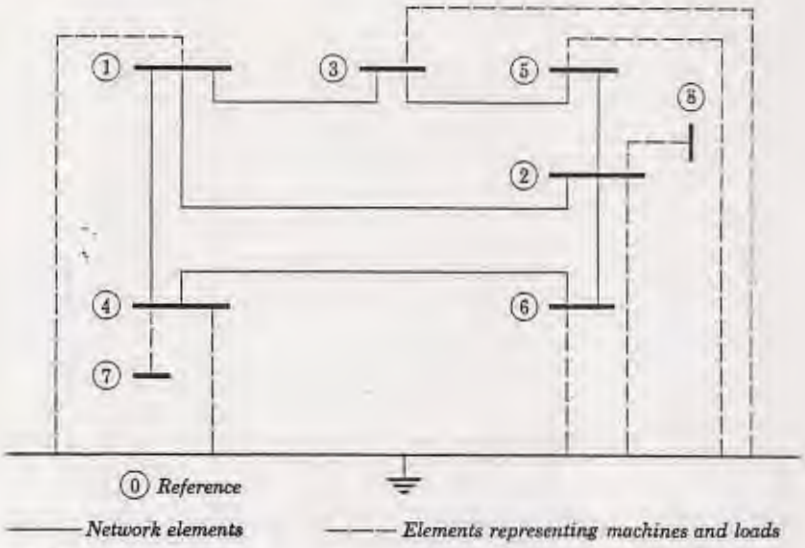

Fig. 10.6 Single line diagram of power system for transient analysis.

includes the static admittance representing the load. Since E_0 is zero, the line parameter YL_{10} does not have to be calculated.

The voltage equation for bus 2 is

$$E_2 = -YL_{21}E_1 - YL_{25}E_5 - YL_{26}E_6 - YL_{28}E_8$$

where bus 8 is a new bus. In this case the diagonal admittance element for bus 2 is

$$Y_{22} = y_{21} + y_{25} + y_{26} + y_{20} + y_{28}$$

where y_{20} is the static admittance representing the load and y_{28} is the machine equivalent admittance. The formulas for the Gauss-Seidel iterative solution of the network shown in Fig. 10.6 are, then,

$$\begin{aligned}
E_1^{k+1} &= -YL_{12}E_2^k - YL_{13}E_3^k - YL_{14}E_4^k \\
E_2^{k+1} &= -YL_{21}E_1^{k+1} - YL_{25}E_5^k - YL_{26}E_6^k - YL_{28}E_8 \\
E_3^{k+1} &= -YL_{31}E_1^{k+1} - YL_{35}E_5^k \\
E_4^{k+1} &= -YL_{41}E_1^{k+1} - YL_{46}E_6^k - YL_{47}E_7 \\
E_5^{k+1} &= -YL_{52}E_2^{k+1} - YL_{53}E_3^{k+1} \\
E_6^{k+1} &= -YL_{62}E_2^{k+1} - YL_{64}E_4^{k+1}
\end{aligned}$$

The initial bus voltages are obtained from the load flow solution prior to the disturbance. The initial voltages for the new buses 7 and 8 are obtained from the equivalent circuit representing the machines

columns corresponding to machines, constant power, and constant current sources need to be retained for the network solution. All rows and columns would have to be maintained, however, if system voltages and power flows are required during the transient calculations.

The procedures described using the bus impedance and admittance matrices and representing each machine as a voltage behind the machine impedance is an application of Thevenin's theorem. An alternate method is to represent the machine as a current source between the machine terminal bus and ground and in parallel with the machine impedance. This is an application of Norton's theorem (Shipley, Sato, Coleman, and Watts, 1966). This eliminates the need to establish an additional bus behind the impedance of each machine. The machine currents are calculated by using the internal machine voltages and the machine impedances. These currents are held constant during the network iterative solution.

10.5 Solution techniques

Preliminary calculations

The first step in a transient stability study is the load flow calculation to obtain system conditions prior to the disturbance. Then the network data must be modified to correspond to the desired representation for transient analysis. In addition, the machine currents prior to the disturbance are calculated from

$$I_{ti} = \frac{P_{ti} - jQ_{ti}}{E_{ti}^*} \qquad i = 1, 2, \ldots, m$$

where m is the number of machines and P_{ti} and Q_{ti} are the scheduled or calculated machine real and reactive terminal powers. The calculated power for the machine at the slack bus and the terminal voltages are obtained from the initial load flow solution. Finally the voltages back of machine impedances must be calculated.

When the machine i is represented by a voltage source of constant magnitude back of transient reactance, the voltage is obtained from

$$E'_{i(0)} = E_{ti} + r_{ai}I_{ti} + jx'_{di}I_{ti}$$

where

$$E'_{i(0)} = e'_{i(0)} + jf'_{i(0)}$$

and $E'_{i(0)}$ is the initial value used in the solution of the differential equa-

tions. The initial internal voltage angle is

$$\delta_{i(0)} = \tan^{-1} \frac{f'_{i(0)}}{e'_{i(0)}}$$

The initial speed $\omega_{i(0)}$ in radians per second is equal to $2\pi f$ where f is the frequency in cycles per second. The initial mechanical power input $P_{mi(0)}$ is equal to the electrical air-gap power P_{ei} prior to the disturbance which can be obtained from

$$P_{ei} = P_{ti} + |I_{ti}|^2 r_{ai}$$

where $|I_{ti}|^2 r_{ai}$ represents the stator losses.

When the effects of saliency and changes in field flux linkages are taken into account a voltage back of quadrature-axis synchronous reactance is used to represent the machine. This voltage is calculated from

$$E_{qi} = E_{ti} + r_{ai} I_{ti} + j x_{qi} I_{ti}$$

where

$$E_{qi} = e_{qi} + j f_{qi}$$

The initial internal voltage angle is then

$$\delta_{i(0)} = \tan^{-1} \frac{f_{qi}}{e_{qi}}$$

As in the simplified representation, the initial speed is equal to $2\pi f$ and the initial mechanical power is equal to P_{ei}, the air-gap power.

The calculations of the voltage proportional to field current E_{Ii} and the voltage proportional to field flux linkages $E'_{qi(0)}$ are required also for this representation. These voltages are obtained from

$$E_{Ii} = E_{ti} + r_{ai} I_{ti} + j x_{di} I_{di} + j x_{qi} I_{qi}$$

and

$$E'_{qi(0)} = E_{qi} - (x_{qi} - x'_{di}) I_{di}$$

where $E'_{qi(0)}$ is the initial value used in the solution of the differential equations. Finally, the initial field voltage $E_{fdi(0)}$ is equal to E_{Ii} if saturation is neglected.

The next step is to change the system parameters to simulate a disturbance. Loss of generation, load, or transmission facilities can be effected by removing from the network the appropriate elements. A three-phase fault can be simulated by setting the voltage at the faulted

bus to zero. Then, the modified network equations are solved to obtain system conditions at the instant after the disturbance occurs.

The techniques described for load flow solutions can be employed to obtain the new bus voltages for the network. In the iterative solution, however, the buses back of machine impedances are treated differently depending on the machine representation. When the machine is represented by a voltage of constant magnitude back of transient reactance, the internal machine bus voltage is held fixed during the entire iterative process. When the machine is represented by the direct and quadrature components, the internal machine bus voltage is held fixed during an iteration. However, at the end of each iteration, the voltage E_{qi} must be reevaluated to reflect the changes in the terminal voltage E_{ti}. First the new voltage for the internal bus is obtained by calculating the new machine terminal current from

$$I_{ti}^{k+1} = (E_{qi}^{k} - E_{ti}^{k+1}) \frac{1}{r_{ai} + jx_{qi}}$$

Then the new component of current along the direct axis is determined. Finally the voltage back of quadrature-axis synchronous reactance is computed from

$$E_{qi}^{k+1} = E'_{qi(0)} + (x_{qi} - x'_{di}) I_{di}^{k+1}$$

where $E'_{qi(0)}$ and $\delta_{i(0)}$, the angle of E_{qi}, are held fixed.

When the network solution has been obtained, the machine terminal current becomes the initial value for the solution of the differential equations. It is used to calculate initial machine air-gap power from

$$P_{ei(0)} = \text{Re}\,(I_{ti(0)} E'^{*}_{i(0)})$$

when the magnitude of the voltage in back of transient reactance is held fixed or from

$$P_{ei(0)} = \text{Re}\,(I_{ti(0)} E^{*}_{qi(0)})$$

when the effects of saliency and changes in field flux linkages are taken into account. The initial voltage $E_{qi(0)}$ is obtained also from the network solution at the instant after the disturbance.

Modified Euler method

When a machine is represented by a voltage of constant magnitude back of transient reactance, it is necessary to solve two first-order differential

equations to obtain the changes in the internal voltage angle δ_i and machine speed ω_i. Thus for an m machine problem where all machines are represented in the simplified manner, it is necessary to solve $2m$ simultaneous differential equations. These equations are

$$\frac{d\delta_i}{dt} = \omega_{i(t)} - 2\pi f$$
$$\frac{d\omega_i}{dt} = \frac{\pi f}{H_i}(P_{mi} - P_{ei(t)}) \qquad i = 1, 2, \ldots, m \tag{10.5.1}$$

If no governor action is considered, P_{mi} remains constant and

$$P_{mi} = P_{mi(0)}$$

In the application of the modified Euler method the initial estimates of the internal voltage angles and machine speeds at time $t + \Delta t$ are obtained from

$$\delta^{(0)}_{i(t+\Delta t)} = \delta^{(1)}_{i(t)} + \left.\frac{d\delta_i}{dt}\right|_{(t)} \Delta t$$
$$\omega^{(0)}_{i(t+\Delta t)} = \omega^{(1)}_{i(t)} + \left.\frac{d\omega_i}{dt}\right|_{(t)} \Delta t \qquad i = 1, 2, \ldots, m$$

where the derivatives are evaluated from equations (10.5.1) and $P_{ei(t)}$ are the machine powers at time t. When $t = 0$, the machine powers $P_{ei(0)}$ are obtained from the network solution at the instant after the disturbance occurs.

Second estimates are obtained by evaluating the derivatives at time $t + \Delta t$. This requires that initial estimates be determined for the machine powers at time $t + \Delta t$. These powers are obtained by calculating new components of the internal voltage from

$$e'^{(0)}_{i(t+\Delta t)} = |E'_i| \cos \delta^{(0)}_{i(t+\Delta t)}$$
$$f'^{(0)}_{i(t+\Delta t)} = |E'_i| \sin \delta^{(0)}_{i(t+\Delta t)}$$

Then a network solution is obtained holding fixed the voltages at the internal machine buses. When there is a three-phase fault on bus f, the voltage E_f also is held fixed at zero. With the calculated bus voltages and the internal voltages, machine terminal currents can be calculated from

$$I^{(0)}_{i(t+\Delta t)} = (E'^{(0)}_{i(t+\Delta t)} - E^{(0)}_{i(t+\Delta t)}) \frac{1}{r_{ai} + j\bar{x}'_{di}}$$

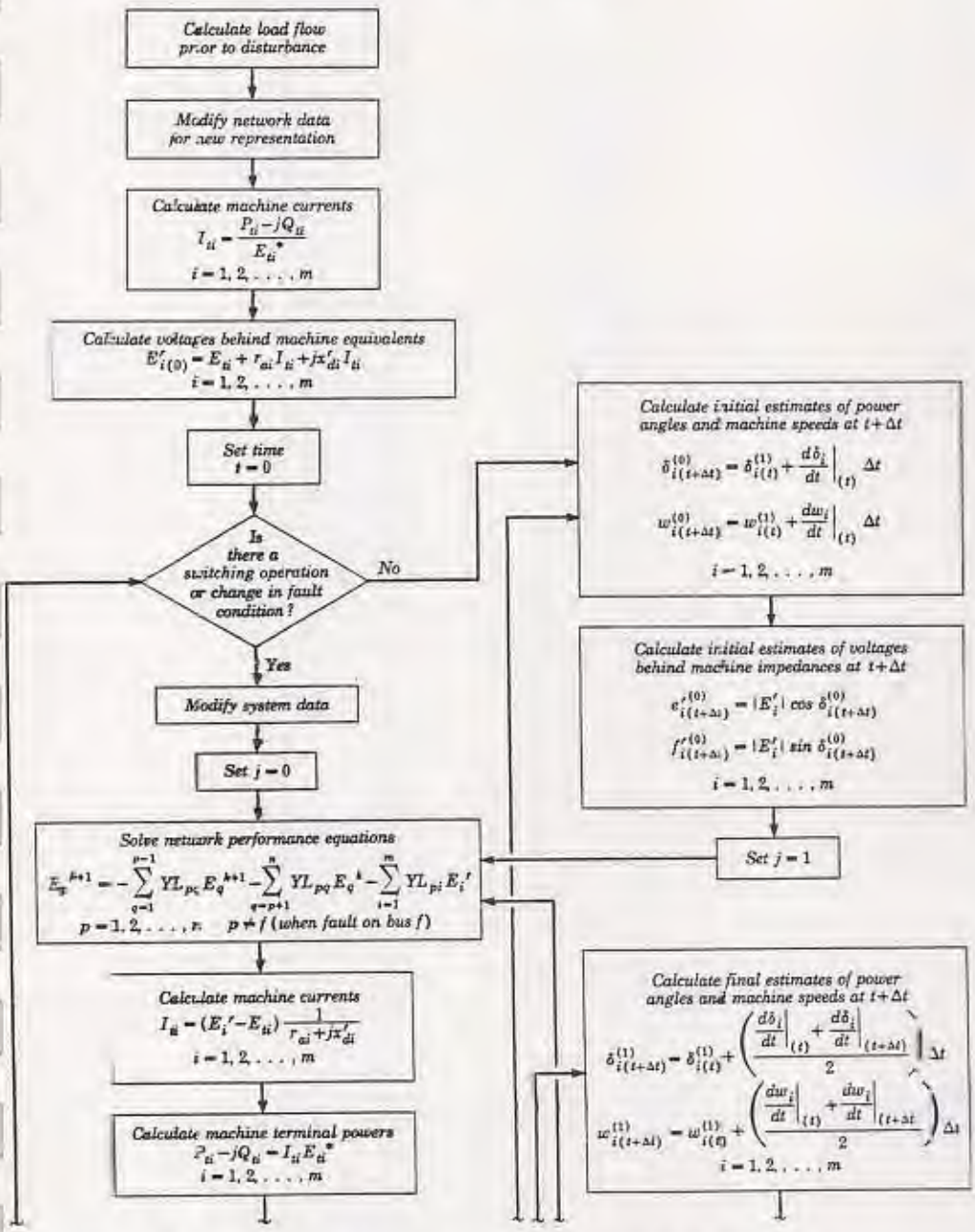

Fig. 10.7 Transient calculations using the modified Euler method.

and machine powers from

$$P^{(0)}_{ei(t+\Delta t)} = \text{Re}\,\{I^{(0)}_{ii(t+\Delta t)}(E'^{(0)}_{i(t+\Delta t)})^*\}$$

The second estimates for the internal voltage angles and machine speeds are obtained from

$$\delta^{(1)}_{i(t+\Delta t)} = \delta^{(1)}_{i(t)} + \left(\frac{\left.\dfrac{d\delta_i}{dt}\right|_{(t)} + \left.\dfrac{d\delta_i}{dt}\right|_{(t+\Delta t)}}{2}\right)\Delta t$$

$$\omega^{(1)}_{i(t+\Delta t)} = \omega^{(1)}_{i(t)} + \left(\frac{\left.\dfrac{d\omega_i}{dt}\right|_{(t)} + \left.\dfrac{d\omega_i}{dt}\right|_{(t+\Delta t)}}{2}\right)\Delta t \qquad i = 1, 2, \ldots, m$$

where

$$\left.\frac{d\delta_i}{dt}\right|_{(t+\Delta t)} = \omega^{(0)}_{i(t+\Delta t)} - 2\pi f$$

$$\left.\frac{d\omega_i}{dt}\right|_{(t+\Delta t)} = \frac{\pi f}{H_i}\,(P_{mi} - P^{(0)}_{ei(t+\Delta t)})$$

The final voltages at time $t + \Delta t$ for the internal machine buses are

$$e'^{(1)}_{i(t+\Delta t)} = |E'_i| \cos \delta^{(1)}_{i(t+\Delta t)}$$
$$f'^{(1)}_{i(t+\Delta t)} = |E'_i| \sin \delta^{(1)}_{i(t+\Delta t)} \qquad i = 1, 2, \ldots, m$$

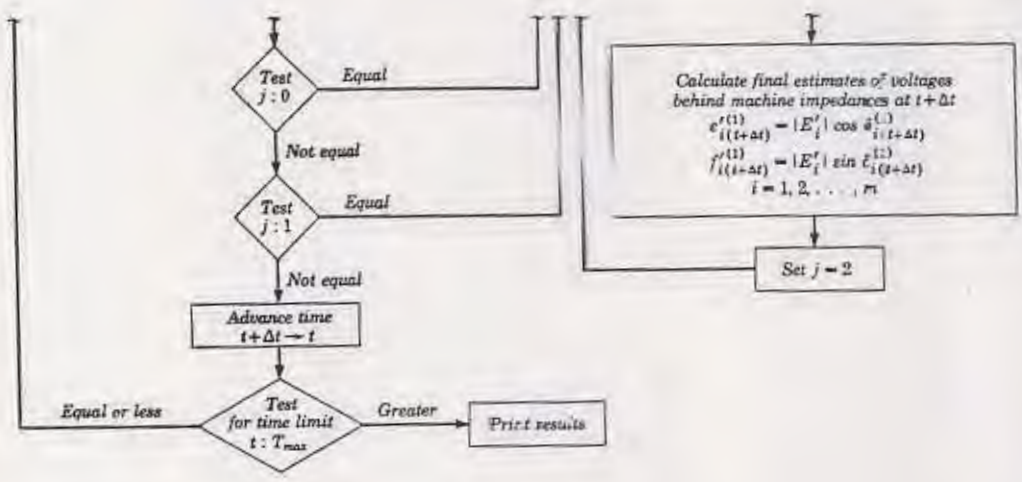

Then the network equations are solved again to obtain the final system voltages at time $t + \Delta t$. The bus voltages are used along with the internal voltages to obtain the machine currents and powers and network power flows. The time is advanced by Δt and a test is made to determine if a switching operation is to be effected or the status of the fault is to be changed. If an operation is scheduled, the appropriate changes are made in the network parameters or variables, or both. Then the network equations are solved to obtain system conditions at the instant after the change occurs. In this calculation the internal voltages are held fixed at the current values. Then estimates are obtained for the next time increment. The process is repeated until t equals the maximum time $T_{(\max)}$ specified for the study.

The sequence of steps for transient analysis by the modified Euler method and the load flow solution by the Gauss-Seidel iterative method using Y_{BUS} is shown in Fig. 10.7. Shown also are the main steps of the preliminary calculations. The procedure shown assumes that all system loads are represented as fixed impedances to ground.

When the effects of saliency and the changes in field flux linkages are to be included in the representation of the machines the following differential equations must be solved simultaneously.

$$\begin{aligned} \frac{d\delta_i}{dt} &= \omega_{i(t)} - 2\pi f \\ \frac{d\omega_i}{dt} &= \frac{\pi f}{H_i}(P_{mi} - P_{ei(t)}) \\ \frac{dE'_{qi}}{dt} &= \frac{1}{T'_{d0i}}(E_{fdi} - E_{Ti}) \qquad i = 1, 2, \ldots, m \end{aligned} \tag{10.5.2}$$

Again, if no governor action is considered, P_{mi} remains fixed and

$$P_{mi} = P_{mi(0)}$$

If the effects of the exciter control system are not included, E_{fdi} remains constant and

$$E_{fdi} = E_{fdi(0)}$$

If each machine of the system is described by equations (10.5.2), $3m$ simultaneous equations must be solved.

Runge-Kutta method

In the application of the Runge-Kutta fourth-order approximation, the changes in the internal voltage angles and machine speeds, again for the

simplified machine representation, are determined from

$$\Delta\delta_{i(t+\Delta t)} = \tfrac{1}{6}(k_{1i} + 2k_{2i} + 2k_{3i} + k_{4i})$$
$$\Delta\omega_{i(t+\Delta t)} = \tfrac{1}{6}(l_{1i} + 2l_{2i} + 2l_{3i} + l_{4i}) \qquad i = 1, 2, \ldots, m$$

The k's and l's are the changes in δ_i and ω_i, respectively, obtained using derivatives evaluated at predetermined points. Then,

$$\begin{aligned} \delta_{i(t+\Delta t)} &= \delta_{i(t)} + \tfrac{1}{6}(k_{1i} + 2k_{2i} + 2k_{3i} + k_{4i}) \\ \omega_{i(t+\Delta t)} &= \omega_{i(t)} + \tfrac{1}{6}(l_{1i} + 2l_{2i} + 2l_{3i} + l_{4i}) \end{aligned} \tag{10.5.3}$$

The initial estimates of changes are obtained from

$$k_{1i} = (\omega_{i(t)} - 2\pi f)\,\Delta t$$
$$l_{1i} = \frac{\pi f}{H_i}(P_{mi} - P_{ei(t)})\,\Delta t \qquad i = 1, 2, \ldots, m$$

where $\omega_{i(t)}$ and $P_{ei(t)}$ are the machine speeds and air-gap powers at time t. The second set of estimates of changes in δ_i and ω_i are obtained from

$$k_{2i} = \left\{\left(\omega_{i(t)} + \frac{l_{1i}}{2}\right) - 2\pi f\right\}\Delta t$$
$$l_{2i} = \frac{\pi f}{H_i}(P_{mi} - P_{ei}^{(1)})\,\Delta t \qquad i = 1, 2, \ldots, m$$

where $P_{ei}^{(1)}$ are the machine powers when the internal voltage angles are $\delta_{i(t)} + (k_{1i}/2)$. Thus, before l_{2i} can be calculated, new components for the voltages for the internal machine buses must be calculated from

$$e_i'^{(1)} = |E_i'| \cos\left(\delta_{i(t)} + \frac{k_{1i}}{2}\right)$$
$$f_i'^{(1)} = |E_i'| \sin\left(\delta_{i(t)} + \frac{k_{1i}}{2}\right) \qquad i = 1, 2, \ldots, m$$

Then, the network equations are solved to obtain bus voltages for the calculation of machine powers $P_{ei}^{(1)}$.

The third set of estimates are obtained from

$$k_{3i} = \left\{\left(\omega_{i(t)} + \frac{l_{2i}}{2}\right) - 2\pi f\right\}\Delta t$$
$$l_{3i} = \frac{\pi f}{H_i}(P_{mi} - P_{ei}^{(2)})\,\Delta t \qquad i = 1, 2, \ldots, m$$

where $P_{ei}^{(2)}$ are obtained from a second solution of the network equations with the internal voltage angles equal to $\delta_{i(t)} + (k_{2i}/2)$ and the compo-

nents of the voltages for the internal machine buses equal to

$$e_i'^{(2)} = |E_i'| \cos\left(\delta_{i(t)} + \frac{k_{2i}}{2}\right)$$
$$f_i'^{(2)} = |E_i'| \sin\left(\delta_{i(t)} + \frac{k_{2i}}{2}\right) \qquad i = 1, 2, \ldots, m$$

The fourth estimates are obtained from

$$k_{4i} = \{(\omega_{i(t)} + l_{3i}) - 2\pi f\}\,\Delta t$$
$$l_{4i} = \frac{\pi f}{H_i}(P_{mi} - P_{ei}^{(3)})\,\Delta t \qquad i = 1, 2, \ldots, m$$

where $P_{ei}^{(3)}$ are obtained from a third solution of the network equations with internal voltage angles equal to $\delta_{i(t)} + k_{3i}$ and voltage components equal to

$$e_i'^{(3)} = |E_i'| \cos(\delta_{i(t)} + k_{3i})$$
$$f_i'^{(3)} = |E_i'| \sin(\delta_{i(t)} + k_{3i})$$

The final estimates of the internal voltage angles and machine speeds at time $t + \Delta t$ are obtained by substituting the k's and l's into equations (10.5.3). The internal voltage angles $\delta_{i(t+\Delta t)}$ are used to calculate the estimates for the components of voltages for the internal machine buses from

$$e_{i(t+\Delta t)}' = |E_i'| \cos \delta_{i(t+\Delta t)}$$
$$f_{i(t+\Delta t)}' = |E_i'| \sin \delta_{i(t+\Delta t)} \qquad i = 1, 2, \ldots, m$$

The network equations are solved then for the fourth time to obtain bus voltages for the calculation of machine currents and powers and network power flows. The time is advanced by Δt and a network solution is obtained for any scheduled switching operation and change in the fault condition. The process is repeated until t equals the maximum time T_{max}.

10.6 Example of transient stability calculations

The method for determining transient stability will be illustrated with the sample power system used in Sec. 8.5 for the load flow problem. In this example the machines are represented by voltages of constant magnitudes behind direct-axis transient reactances. Loads are represented by fixed admittances to ground.

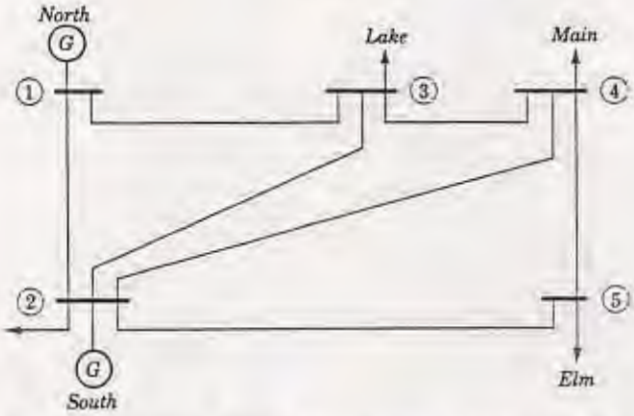

Fig. 10.8 Sample system for transient stability calculations.

Problem

Using the bus admittance matrix and the Gauss-Seidel iterative method for the solution of the network equations and the modified Euler method for the solution of the swing equations:

a. Determine the effects on the sample power system shown in Fig. 10.8 of a three-phase fault on bus 2 for a duration of 0.1 sec.

b. Determine the effects of the fault on bus 2 for a duration of 0.2 sec.

Solution

The results of the load flow calculation prior to the fault are given in Table 10.1. The inertia constants, direct-axis transient reactances, and equivalent admittances of the generators at buses 1 and 2 in per unit on a 100,000 kva base are given in Table 10.2.

Table 10.1 Bus voltages, generation, and loads from load flow calculation prior to fault

Bus code p	*Bus voltages* E_p	*Generation*		*Load*	
		Megawatts	*Megavars*	*Megawatts*	*Megavars*
1	$1.06000 + j0.00000$	129.565	−7.480	0.0	0.0
2	$1.04621 - j0.05128$	40.0	30.0	20.0	10.0
3	$1.02032 - j0.08920$	0.0	0.0	45.0	15.0
4	$1.01917 - j0.09506$	0.0	0.0	40.0	5.0
5	$1.01209 - j0.10906$	0.0	0.0	60.0	10.0

Table 10.2 Inertia constants, direct-axis transient reactances, and equivalent admittances for generators of sample system

Bus code p–i	Inertia constant H	Direct-axis transient reactance x'_d	Equivalent admittance y_{pi}
1–6	50.0	0.25	$0.0 - j4.00000$
2–7	1.0	1.50	$0.0 - j0.66667$

a The Gauss-Seidel iterative equations describing the performance of the network, using the bus code numbers given in Fig. 10.9, are

$$
\begin{aligned}
E_1^{k+1} &= -YL_{12}E_2^k - YL_{13}E_3^k - YL_{16}E_6 \\
E_2^{k+1} &= -YL_{21}E_1^{k+1} - YL_{23}E_3^k - YL_{24}E_4^k - YL_{25}E_5^k - YL_{27}E_7 \\
E_3^{k+1} &= -YL_{31}E_1^{k+1} - YL_{32}E_2^{k+1} - YL_{34}E_4^k \\
E_4^{k+1} &= -YL_{42}E_2^{k+1} - YL_{43}E_3^{k+1} - YL_{45}E_5^k \\
E_5^{k+1} &= -YL_{52}E_2^{k+1} - YL_{54}E_4^{k+1}
\end{aligned}
$$

The line parameters YL_{pq} for these equations can be obtained from the elements of the bus admittance matrix used for the load flow solution prior to the disturbance and the equivalent admittances for machines and loads.

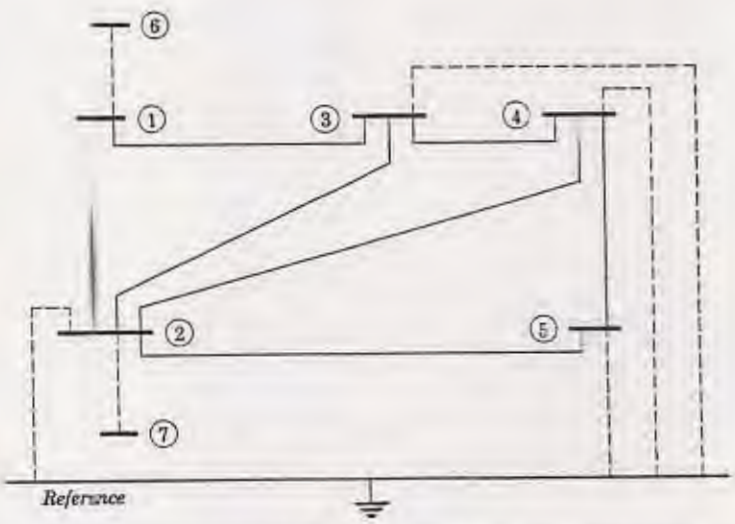

Fig. 10.8 Representation of sample system for transient stability calculations.

The bus admittance matrix is

$$Y_{BUS} = \begin{array}{c|c|c|c|c|c|}
 & ① & ② & ③ & ④ & ⑤ \\
\hline
① & 6.25000 - j18.69500 & -5.00000 + j15.00000 & -1.25000 + j\,3.75000 & & \\
\hline
② & -5.00000 + j15.00000 & 10.83334 - j32.41500 & -1.66667 + j\,5.00000 & -1.66667 + j\,5.00000 & -2.50000 + j\,7.50000 \\
\hline
③ & -1.25000 + j\,3.75000 & -1.66667 + j\,5.00000 & 12.91667 - j38.69500 & -10.00000 + j30.00000 & \\
\hline
④ & & -1.66667 + j\,5.00000 & -10.00000 + j30.00000 & 12.01667 - j38.69500 & -1.25000 + j\,3.75000 \\
\hline
⑤ & & -2.50000 + j\,7.50000 & & -1.25000 + j\,3.75000 & 3.75000 - j11.21000 \\
\hline
\end{array}$$

The line parameters are obtained from the equation

$$YL_{pq} = Y_{pq}L_p = Y_{pq}\left(\frac{1}{Y_{pp}}\right)$$

The modified line parameter for element 1–2 is

$$YL_{12} = Y_{12}\left(\frac{1}{Y_{11} + y_{16}}\right)$$

$$YL_{12} = \frac{-5.00000 + j15.00000}{6.25000 - j22.69500}$$

$$= -0.67074 - j0.03560$$

where Y_{11} and Y_{12} are elements in the bus admittance matrix and y_{16} is the equivalent admittance representing the machine at bus 1, which is given in Table 10.2. The remaining line parameters for bus 1 are obtained from the equations

$$YL_{13} = Y_{13}\left(\frac{1}{Y_{11} + y_{16}}\right)$$

$$YL_{16} = Y_{16}\left(\frac{1}{Y_{11} + y_{16}}\right)$$

where

$$Y_{16} = -y_{16}$$

The line parameter for element 2–1 is obtained from

$$YL_{21} = Y_{21}\left(\frac{1}{Y_{22} + y_{27} + y_{20}}\right)$$

where Y_{22} and Y_{21} are elements in the bus admittance matrix; y_{27} is the equivalent admittance representing the machine at bus 2 and y_{20} is the equivalent admittance to ground representing the load at bus 2. The equation for the load equivalent admittance is

$$y_{p0} = \frac{P_{Lp} - jQ_{Lp}}{e_p^2 + f_p^2}$$

and for bus 2

$$y_{20} = \frac{0.20 - j0.10}{(1.04621)^2 + (0.05128)^2}$$

$$= 0.18228 - j0.09114$$

where the bus voltage is obtained from the load flow solution and is given in Table 10.1. The line parameter YL_{21} is

$$YL_{21} = \frac{-5.00000 + j15.00000}{11.01562 - j33.17281}$$
$$= -0.45235 - j0.00052$$

The YL_{pq}'s for all elements are given in Table 10.3.

The voltages behind the equivalent admittances representing the machines are obtained from the equation

$$E'_i = E_{ti} + jx'_{di}I_{ti} \qquad i = n+1, n+2, \ldots, n+m$$

where

$$I_{ti} = \frac{P_{ti} - jQ_{ti}}{E^*_{ti}}$$

and n is the number of buses of the network and m is the number of machines. For the machine at bus 1

$$E_6 = 1.06 + j0.0 + j0.25\left(\frac{1.29565 + j0.07480}{1.06 - j0.0}\right)$$
$$= 1.04236 + j0.30558$$

Table 10.3 Line parameters for transient stability representation of sample system

Bus code p–q	YL_{pq}
1–2	$-0.67074 - j0.03560$
1–3	$-0.16769 - j0.00890$
1–6	$-0.16383 + j0.04512$
2–1	$-0.45235 - j0.00052$
2–3	$-0.15078 - j0.00017$
2–4	$-0.15078 - j0.00017$
2–5	$-0.22618 - j0.00026$
2–7	$-0.01810 + j0.00601$
3–1	$-0.09625 + j0.00089$
3–2	$-0.12833 + j0.00119$
3–4	$-0.77000 + j0.00711$
4–2	$-0.12866 + j0.00115$
4–3	$-0.77198 + j0.00687$
4–5	$-0.09650 + j0.00086$
5–2	$-0.65236 + j0.02866$
5–4	$-0.32618 + j0.01433$

where the bus voltage and generation are obtained from Table 10.1 and the machine reactance from Table 10.2. The voltage magnitude is

$$|E_6| = 1.08523$$

and the internal voltage angle is

$$\delta_6 = 16.339° \quad \text{or} \quad \delta_6 = 0.28517 \text{ rad}$$

The voltage behind the equivalent admittance representing the machine at bus 2 is obtained in a similar manner and is

$$E_7 = 1.50335 + j0.49981$$

The voltage magnitude is

$$|E_7| = 1.58426$$

and the internal voltage angle is

$$\delta_7 = 18.390° \quad \text{or} \quad \delta_7 = 0.32097 \text{ rad}$$

The fault at bus 2 is simulated by setting the voltage at this bus equal to zero. Then the network equations are solved to obtain system conditions at the instant the fault occurs. In this calculation the voltage at the faulted bus and the voltages behind the equivalent admittances representing the machines are held fixed. The calculated system voltages are given in Table 10.4.

The machine currents, with the fault, are calculated from the equation

$$I_{ti} = (E'_i - E_{ti})y_{pi}$$

Then

$$I_{s1} = \{(1.04236 + j0.30558) - (0.19234 + j0.00330)\}(0.0 - j4.0)$$
$$= 1.20912 - j3.40008$$

Table 10.4 Bus voltages of sample system at the instant the fault occurs

Bus code p	*Bus voltage* E_p
1	$0.19234 + j0.00330$
2	$0.0 \quad + j0.0$
3	$0.04707 - j0.00096$
4	$0.03758 - j0.00118$
5	$0.01226 - j0.00093$

and

$$I_{72} = \{(1.50335 + j0.49981) - (0.0 + j0.0)\}(0.0 - j0.66667)$$
$$= 0.33321 - j1.00223$$

The electrical power of the machines is calculated from

$$P_{ei} - jQ_{ei} = I_{ri}(E'_i)^*$$

The real power of the machine at bus 1 is

$$P_{e6} = (1.20912)(1.04236) - (3.40008)(0.30558)$$
$$= 0.22134$$

The real power of the machine at bus 2 is zero since bus 2 is the faulted bus and its voltage is zero. Calculating the real power as a check,

$$P_{e7} = (0.33321)(1.50335) - (1.00223)(0.49981)$$
$$= 0.0000067$$

The initial estimates of the internal voltage angles and speed of the machines at $t + \Delta t$ are obtained from the differential equations. The rate of change in speed of the machines is calculated from

$$\frac{d\omega_i}{dt} = \frac{\pi f}{H_i}(P_{mi} - P_{ei(t)})$$

Then, at $t = 0$ for the machine at bus 1,

$$\left.\frac{d\omega_6}{dt}\right|_{(0)} = \frac{3.1416(60)}{50.0}(1.29565 - 0.22134)$$
$$= 4.05006$$

Similarly, for the machine at bus 2,

$$\left.\frac{d\omega_7}{dt}\right|_{(0)} = \frac{3.1416(60)}{1.0}(0.40000 - 0.0)$$
$$= 75.3984$$

Next, the initial estimates of the speed of the machines at $t + \Delta t$ are calculated from

$$\omega^{(0)}_{i(t+\Delta t)} = \omega^{(1)}_{i(t)} + \left.\frac{d\omega_i}{dt}\right|_{(t)} \Delta t$$

where $\omega^{(1)}_{i(t)}$ at $t = 0$ is the rated speed and equal to $2\pi f$ and $\Delta t = 0.02$. Then, for the machine at bus 1,

$$\omega^{(0)}_{6(0.02)} = 2(3.1416)60 + (4.05006)0.02$$
$$= 376.992 + 0.08100$$
$$= 377.07300$$

Similarly, for the machine at bus 2,

$$\omega^{(0)}_{7(0.02)} = 2(3.1416)60 + (75.3984)0.02$$
$$= 376.992 + 1.50797$$
$$= 378.49997$$

The rates of change of the internal voltage angles are calculated next from

$$\frac{d\delta_i}{dt} = \omega_{i(t)} - 2\pi f$$

Since $\omega_{i(t)}$ at $t = 0$ is equal to $2\pi f$, then for the machines

$$\left.\frac{d\delta_6}{dt}\right|_{(0)} = 0.0 \quad \text{and} \quad \left.\frac{d\delta_7}{dt}\right|_{(0)} = 0.0$$

The initial estimates of the internal voltage angles of the machines are calculated from

$$\delta^{(0)}_{i(t-\Delta t)} = \delta^{(1)}_{i(t)} + \left.\frac{d\delta_i}{dt}\right|_{(t)} \Delta t$$

Then, for the machines, the internal voltage angles in radians are

$$\delta^{(0)}_{6(0.01)} = 0.28517$$
$$\delta^{(0)}_{7(0.02)} = 0.32097$$

The new components of the voltages behind the equivalent admittances representing the machines are calculated from

$$e'^{(0)}_{i(t+\Delta t)} = |E'_i| \cos \delta^{(0)}_{i(t+\Delta t)}$$

and

$$f'^{(0)}_{i(t+\Delta t)} = |E'_i| \sin \delta^{(0)}_{i(t+\Delta t)}$$

These voltage components replace the previous values obtained from the load flow solution prior to the fault and again the network equations are solved. In this calculation the new voltages behind the machine equivalent admittances as well as the zero voltage at the faulted bus are held constant.

Since there is no change in the internal voltage angle for the initial estimate, the system voltages and machine currents and powers are the same as those obtained from the network solution at the instant the fault occurs. Consequently, the rates of change in the speed of the machines at $t + \Delta t = 0.02$ will be the same. Therefore,

$$\left.\frac{d\omega_6}{dt}\right|_{(0.02)} = 4.05006 \quad \text{and} \quad \left.\frac{d\omega_7}{dt}\right|_{(0.02)} = 75.39484$$

The final estimate for the speed of the machines at $t + \Delta t$ is calculated from

$$\omega^{(1)}_{i(t+\Delta t)} = \omega^{(1)}_{i(t)} + \left(\frac{\left.\frac{d\omega_i}{dt}\right|_{(t)} + \left.\frac{d\omega_i}{dt}\right|_{(t-\Delta t)}}{2}\right)\Delta t$$

Then, for the machine at bus 1,

$$\omega^{(1)}_{6(0.02)} = 2(3.1416)60 + \left(\frac{4.05006 + 4.05006}{2}\right)0.02$$
$$= 377.07300$$

Similarly, for the machine at bus 2,

$$\omega^{(1)}_{7(0.02)} = 2(3.1416)60 + \left(\frac{75.3984 + 75.3984}{2}\right)0.02$$
$$= 378.49997$$

The rates of change of the internal voltage angles at $t + \Delta t$ are calculated from

$$\frac{d\delta_i}{dt} = \omega^{(1)}_{i(t+\Delta t)} - 2\pi f$$

Then, for the machine at bus 1,

$$\left.\frac{d\delta_6}{dt}\right|_{(0.02)} = 377.0730 - 376.9920$$
$$= 0.08100$$

Similarly, for the machine at bus 2,

$$\left.\frac{d\delta_7}{dt}\right|_{(0.02)} = 378.49997 - 376.9920$$
$$= 1.50797$$

The final estimates for the internal voltage angles of the machines at $t + \Delta t$ are calculated from

$$\delta^{(1)}_{i(t-\Delta t)} = \delta^{(1)}_{i(t)} + \left(\frac{\left.\frac{d\delta_i}{dt}\right|_{(t)} + \left.\frac{d\delta_i}{dt}\right|_{(t+\Delta t)}}{2}\right)\Delta t$$

Then, for the machine at bus 1,

$$\delta^{(1)}_{6(0.02)} = 0.28517 + \left(\frac{0.0 + 0.08100}{2}\right)0.02$$
$$= 0.28517 + 0.00081$$
$$= 0.28598$$

Similarly, for the machine at bus 2,

$$\delta^{(1)}_{7(0.02)} = 0.32097 + \left(\frac{0.0 + 1.50797}{2}\right) 0.02$$
$$= 0.32097 + 0.01508$$
$$= 0.33605$$

The internal voltage angles in degrees at $t + \Delta t = 0.02$ are

$$\delta^{(1)}_{6(0.02)} = 0.28598 \left(\frac{180}{\pi}\right) = 16.38540°$$

and

$$\delta^{(1)}_{7(0.02)} = 0.33605 \left(\frac{180}{\pi}\right) = 19.25420°$$

At $t + \Delta t = 0.02$ the final components of voltages behind the machine equivalent admittances are

$$e_6'^{(1)} = 1.08623 \cos (16.38540)$$
$$= 1.04212$$
$$f_6'^{(1)} = 1.08623 \sin (16.38540)$$
$$= 0.30641$$

and

$$e_7'^{(1)} = 1.58426 \cos (19.25420)$$
$$= 1.49564$$
$$f_7'^{(1)} = 1.58426 \sin (19.25420)$$
$$= 0.52243$$

Then the network equations are solved to obtain the final system voltages at $t + \Delta t = 0.02$. The voltages obtained from this calculation are given in Table 10.5.

Table 10.5 Bus voltages of sample system at $t + \Delta t = 0.02$

Bus code p	*Bus voltage* E_p
1	$0.19258 + j0.00353$
2	$0.0 \quad + j0.0$
3	$0.04815 - j0.00114$
4	$0.03845 - j0.00133$
5	$0.01249 - j0.00097$

With these system voltages the machine currents and powers at $t + \Delta t = 0.02$ can be calculated. The current of the machine at bus 1 is

$$\bar{I}_{61(0.02)} = \{(1.04212 + j0.30641) - (0.19258 + j0.00353)\}(0.0 - j4.0)$$
$$= 1.21152 - j3.39816$$

and the real power is

$$P_{e5(0.02)} = (1.21152)(1.04212) - (3.39816)(0.30641)$$
$$= 0.22132$$

The current of the machine at bus 2 is

$$\bar{I}_{62(0.02)} = \{(1.49564 + j0.52243) - (0.0 + j0.0)\}(0.0 - j0.66667)$$
$$= 0.34829 - j0.99710$$

and the real power is zero since the fault is at bus 2.

This completes the calculations for values at $t + \Delta t = 0.02$. Then the time is set to $t = 0.02$ and the process repeated to obtain estimates at $t + \Delta t = 0.04$. When the time is advanced to $t = 0.10$, however, the network equations are solved without the fault to obtain the post fault conditions before proceeding with the normal process. In the network calculation only the voltages behind the machine equivalent admittances are held constant. The machine currents and powers obtained with the new system voltages are used to obtain new estimates at $t + \Delta t = 0.12$. The process is continued until $t = T_{max}$.

The internal voltage angles and the ratios of actual to rated speed of the machines for the complete calculation are shown in Figs. 10.10 and 10.11, respectively. The system is stable for this disturbance.

b. The procedure for determining the transient stability of the sample system for a fault on bus 2 of duration 0.2 sec is identical except that the network solution without the fault is obtained when $t = 0.20$ instead of $t = 0.10$ as in part *a*. The internal voltage angles and the ratios of actual to rated speed of the machines for the complete calculation are shown in Figs. 10.12 and 10.13. The system is unstable for this disturbance.

10.7 Exciter and governor control systems

In the solution techniques described in Sec. 10.5 the effects of the exciter and governor control systems on power system response were neglected. In that representation the field voltage E_{fd} and the mechanical power P_m were held constant in the transient calculations. When a more detailed evaluation of system response is required or the period of analysis extends beyond one second it is important to include the effects of the exciter and governor systems.

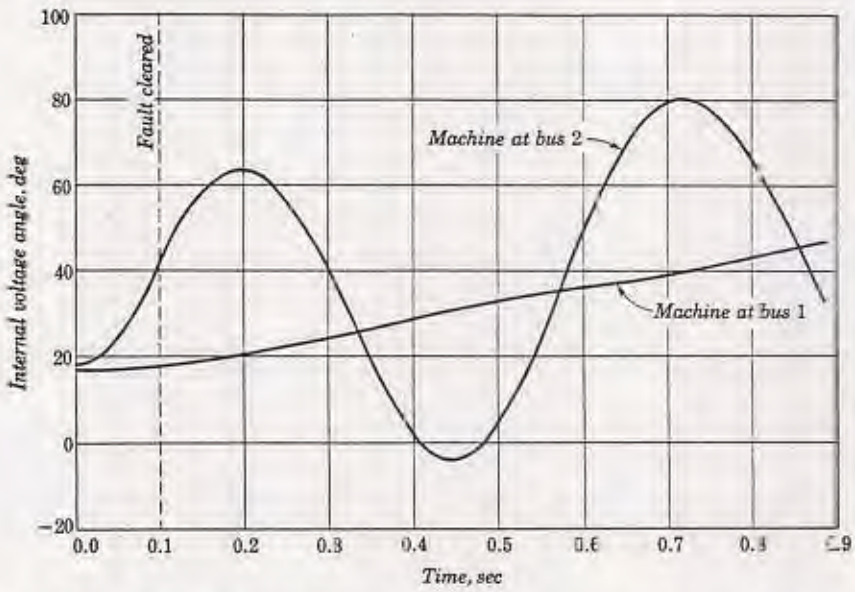

Fig. 10.10 Internal voltage angle of machine with respect to time for a fault duration of 0.1 sec.

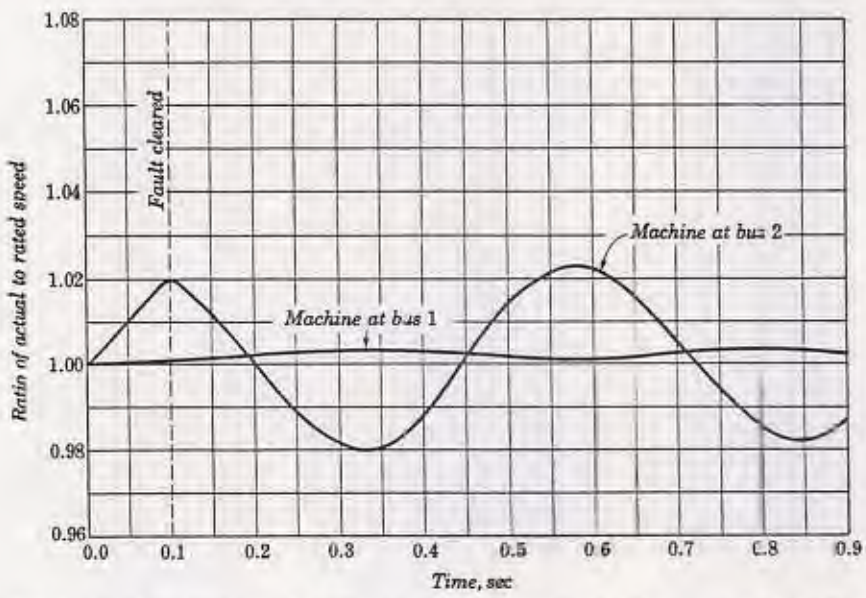

Fig. 10.11 Ratio of actual to rated speed of machine with respect to time for a fault duration of 0.1 sec.

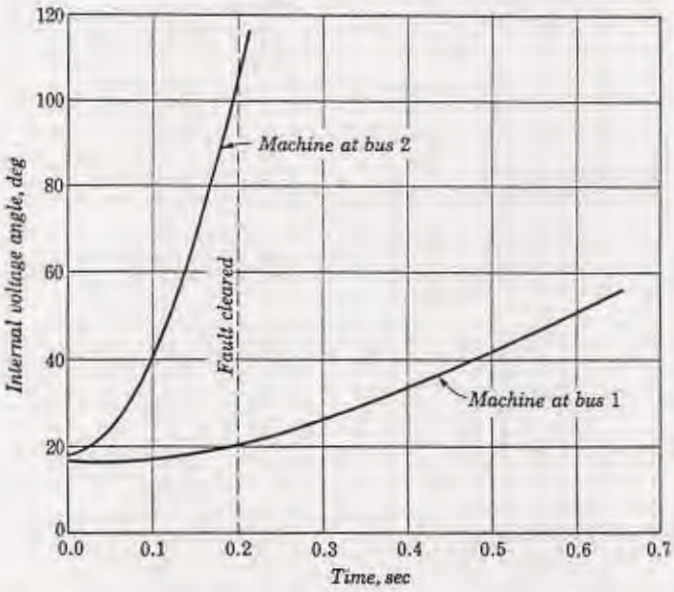

Fig. 10.12 Internal voltage angle of machine with respect to time for a fault duration of 0.2 sec.

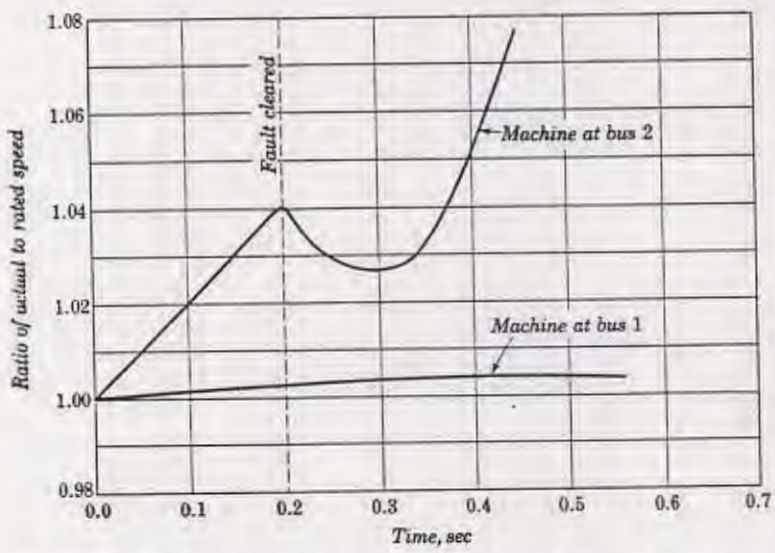

Fig. 10.13 Ratio of actual to rated speed of machine with respect to time for a fault duration of 0.2 sec.

The exciter control system provides the proper field voltage to maintain a desired system voltage usually at the high-voltage bus of the power plant. An important characteristic of an exciter control system is its ability to respond rapidly to voltage deviations during both normal and emergency system operation. Many different types of exciter control systems are employed on power systems. The basic components of an exciter control system are the regulator, amplifier, and exciter. The regulator measures the actual regulated voltage and determines the voltage deviation. The deviation signal produced by the regulator is then amplified to provide the signal required to change the exciter field current. This in turn produces a change in the exciter output voltage which results in a new excitation level for the generator.

A convenient form of representing a control system is a block diagram that relates through transfer functions the input and output variables of the principal components of the system. A block diagram for a simplified representation of a continuously acting exciter control system is shown in Fig. 10.14. This is one of the important types of exciter control systems. This representation includes transfer functions to describe the regulator, amplifier, exciter, and stabilizing loop. The stabilizing loop modifies the response to eliminate undesired oscillations and overshoot of the regulated voltage. The differential equations relating the input and output variables of the regulator, amplifier, exciter, and stabilizing loop, respectively, are

$$
\begin{aligned}
\frac{dE^{\text{v}}}{dt} &= \frac{1}{T_R}(E_S - E_t - E^{\text{v}}) \\
\frac{dE^{\text{iii}}}{dt} &= \frac{1}{T_A}\left\{K_A\left(E^{\text{v}} + \frac{E_0^{\text{iii}}}{K_A} - E^{\text{iv}}\right) - E^{\text{iii}}\right\} \\
\frac{dE_{fd}}{dt} &= \frac{1}{T_E}(E^{\text{iii}} - K_E E_{fd}) \\
\frac{dE^{\text{iv}}}{dt} &= \frac{1}{T_F}\left\{K_F\frac{dE_{fd}}{dt} - E^{\text{iv}}\right\}
\end{aligned}
\tag{10.7.1}
$$

where E_S = scheduled voltage in per unit
E_0^{iii} = output voltage of the amplifier in per unit prior to the disturbance
T_R = regulator time constant
K_A = amplifier gain
T_A = amplifier time constant
K_E = exciter gain
T_E = exciter time constant
K_F = stabilizing loop gain
T_F = stabilizing loop time constant

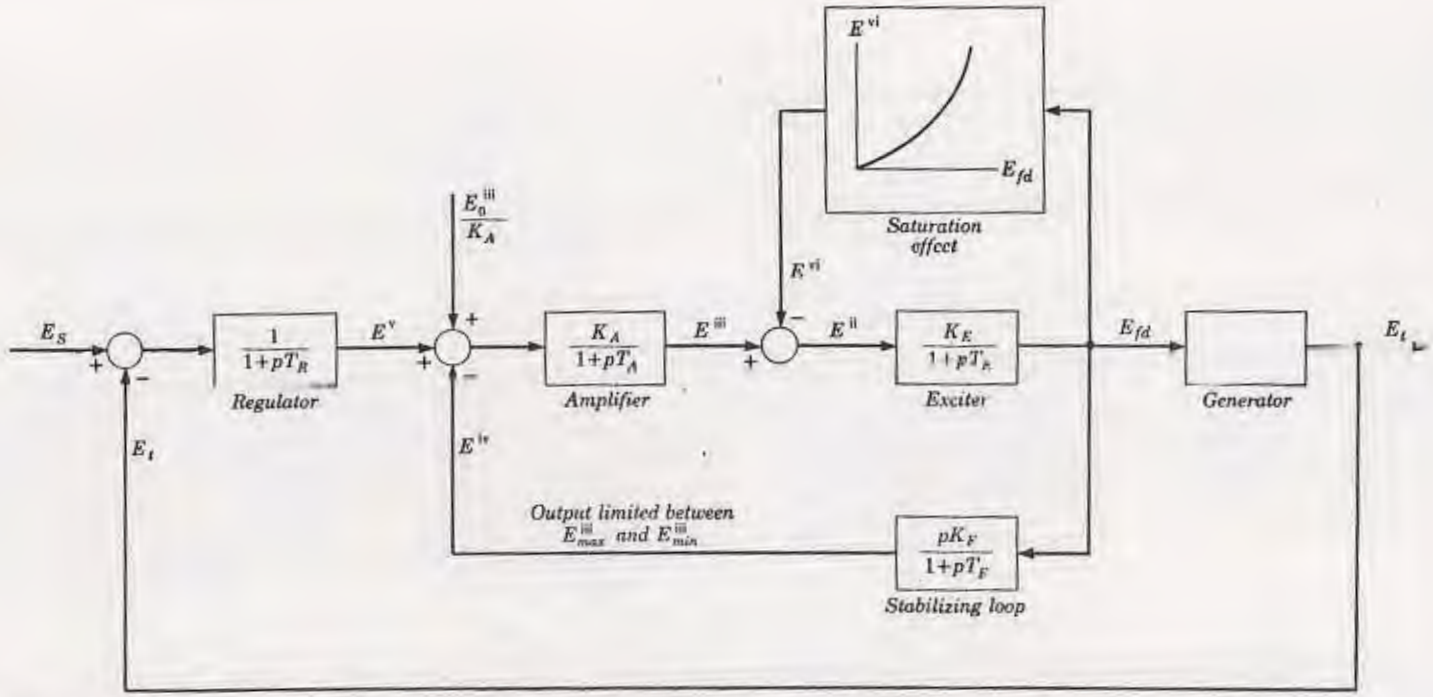

Fig. 10.14 ***Block diagram for a representation of an exciter control system.***

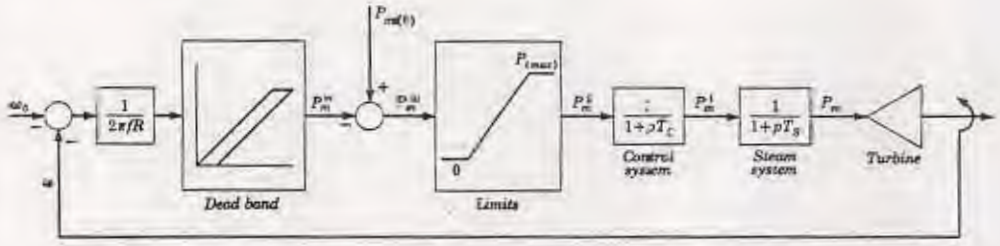

Fig. 10.15 Block diagram for a simplified representation of a speed governor control system.

and the intermediate variables are designated by E^{ii}, E^{iii}, E^{iv}, E^{v} and E^{vi}. The intermediate variable E^{i} is

$$E^{i} = E^{iii} - E^{vi}$$

where E^{vi} is equivalent to the demagnetizing effect due to saturation in the exciter. This is determined from

$$E^{vi} = Ae^{BE_{fd}}$$

where A and B are constants depending upon the exciter saturation characteristic.

To include the effects of the exciter control system, equations (10.7.1) are solved simultaneously with the equations (10.5.2) describing the machine.

The effects of the speed governor control during transient periods can be taken into account by using the simplified representation of the governor control system shown in Fig. 10.15. This representation includes a transfer function describing the steam system with a time constant T_S and a transfer function describing the control system with a time constant T_C. The differential equations relating the input and output variables of these transfer functions, respectively, are

$$\frac{dP_m}{dt} = \frac{1}{T_S}(P_m^{i} - P_m)$$
$$\frac{dP_m^{i}}{dt} = \frac{1}{T_C}(P_m^{ii} - P_m^{i}) \qquad (10.7.2)$$

where P_m is the mechanical power and the intermediate variables are designated by P_m^{i}, P_m^{ii}, P_m^{iii}, and P_m^{iv}. The variables P_m^{ii} and P_m^{iii} are related by the following:

$$
\begin{array}{ll}
P_m^{\mathrm{ii}} = 0 & P_m^{\mathrm{iii}} \leq 0 \\
P_m^{\mathrm{ii}} = P_m^{\mathrm{iii}} & 0 < P_m^{\mathrm{iii}} < P_{\max} \\
P_m^{\mathrm{ii}} = P_{\max} & P^{\mathrm{iii}} \geq P_{\max}
\end{array}
$$

where $P_{\max}$ is the maximum turbine capability. The intermediate variable P_m^{iii} is

$$P_m^{\mathrm{iii}} = P_{m(0)} - P_m^{\mathrm{iv}}$$

where $P_{m(0)}$ is the initial mechanical power. The intermediate variable P_m^{iv} is

$$P_m^{\mathrm{iv}} = \frac{1}{R}\left(\frac{\omega_0 - \omega}{2\pi f} \pm DB_T\right)$$

where R is the speed regulation in per unit and DB_T is the dead band travel, that is, the change in speed required to overcome the dead band of the governor system. A typical governor characteristic is shown in Fig. 10.16.

Equations (10.7.2) are solved simultaneously with equations (10.5.2) if the effects of the governor control system are included.

10.8 Distance relays

Coordination in the planning of generation and transmission facilities and the design of an effective protective relaying system is essential for the reliable performance of a power system. The principal purpose of relays is to protect the power system from the effects of faults by initiating

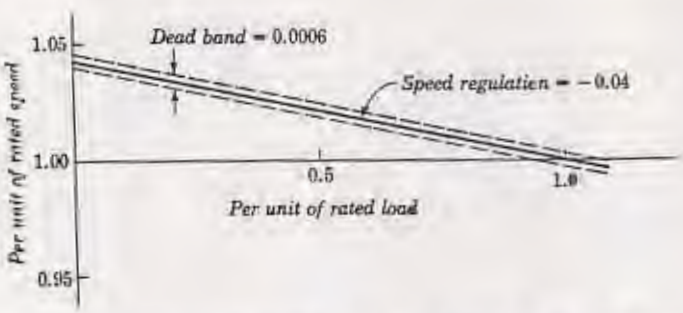

Fig. 10.16 Typical governor characteristic set for rated output at rated speed.

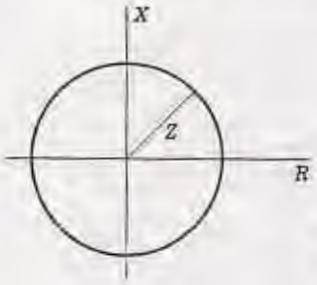

Fig. 10.17 Operating characteristic of distance relay plotted on an RX diagram.

circuit breaker operations to disconnect the faulted equipment. The design of a protective relaying system must assure proper operation so as not to disconnect additional equipment that would aggravate the effects of the disturbance and it must assure that the faulted equipment is cleared sufficiently fast to mitigate the effects of the fault. In addition, the relaying system must not limit the design capability of the generation and transmission facilities.

An important type of relay that is used for high-voltage transmission line protection is the distance relay. This relay responds to the ratio of measured voltage to measured current which can be expressed as an impedance. A convenient means of showing the operating characteristic of a distance relay is with an RX diagram on which a circle is drawn with the radius equal to the impedance setting as shown in Fig. 10.17. When the value of the impedance seen by the relay falls within the circle, the relay will operate.

To provide adequate primary and backup protection, distance relays have three units. The operating characteristic of each unit can be adjusted independently. Furthermore, the proper functioning of distance relays requires the capability to distinguish direction. This is provided by either a directional unit, as in the impedance-type distance relay, or is inherent in the operating characteristics, as in the mho-type distance relay. The operating characteristics of these two relays are shown in Fig. 10.18. The circles associated with the three units are labeled zone 1, zone 2, and zone 3.

When a fault occurs and the value of impedance seen by the relay falls within zone 1 and above the characteristic of the directional unit of the impedance type, the zone 1 contacts will close and trip the circuit breaker immediately. In this case all three units will operate because zone 1 is the smallest circle. When the impedance falls only within zones 2 and 3, or zone 3, the contacts of the associated units will close and energize a timer. At a specified time setting, the timer will close a second set of contacts associated with zone 2. If the first set of contacts

associated with zone 2 is closed the circuit breaker will be tripped. If the zone 2 contacts are not closed, that is, the impedance seen by the relay is not within zone 2, then the timer, at a later specified time, will close a second set of contacts associated with zone 3. If the first set of contacts associated with zone 3 is closed then the circuit breaker will be tripped. The time delays for zones 2 and 3 can be set independently. Zones 1 and 2 provide primary protection for a transmission line section, whereas zones 2 and 3 provide backup protection in the event relays or circuit breakers of adjoining facilities fail to operate properly.

During a system disturbance and following the switching operations to clear the faulted equipment, power swings will occur on the transmission system until a new stable operating condition is established. These swings should not cause relays associated with the unfaulted equipment

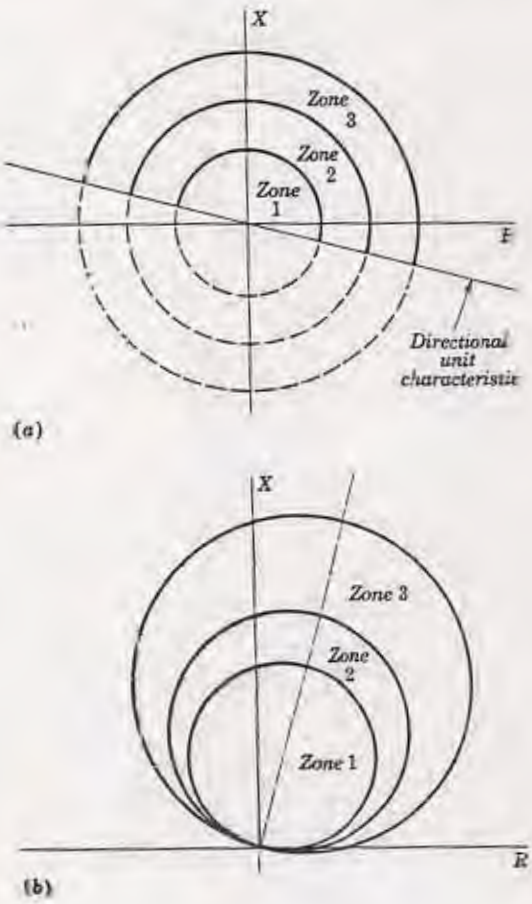

***Fig. 10.18** Operating characteristics of distance relays. (a) Impedance type; (b) mho type.*

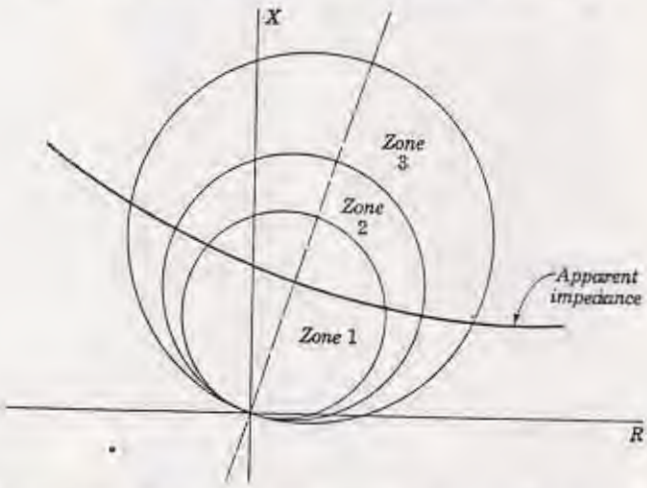

Fig. 10.19 Trajectory of apparent impedance during a power swing.

to operate. The operation of the relay system can be tested for various system disturbances by calculating during the step-by-step transient calculations the apparent impedance, that is, the impedance seen by the relay. The apparent impedance calculated at each time increment can be compared to the operating characteristics of the relay. A convenient means of making this comparison is to plot the impedance values on the RX diagram of the relay as shown in Fig. 10.19.

The apparent impedance is calculated from the final results obtained from the network solution at time $t + \Delta t$. First the current in a specified transmission line p–q is calculated from

$$I_{pq} = (E_p - E_q)y_{pq}$$

Then, the apparent impedance for bus p is

$$Z_p = \frac{E_p}{I_{pq}}$$

or in complex form,

$$R_p + jX_p = \frac{e_p + jf_p}{a_{pq} + jb_{pq}}$$

where $R_p = \dfrac{e_p a_{pq} + f_p b_{pq}}{a_{pq}^2 + b_{pq}^2}$

$$X_p = \frac{f_p a_{pq} - e_p b_{pq}}{a_{pq}^2 + b_{pq}^2}$$

The values R_p and X_p are the coordinates in per unit on the RX diagram of the apparent impedance at time $t + \Delta t$.

Normal information related to the operating characteristics of the relay includes the diameters of the circles for each zone, the angle θ with respect to the R axis of the line along which the centers of the circles lie, and the positions of the centers of the circles along this line. This information is used to determine the coordinates in per unit of the center of each circle. These coordinates are determined from

$$R_c = \left(\frac{\frac{D}{2} \times \text{base kva}}{(\text{base kv})^2 \times 10^3}\right) \cos\theta$$

$$X_c = \left(\frac{\frac{D}{2} \times \text{base kva}}{(\text{base kv})^2 \times 10^3}\right) \sin\theta$$

where D is the diameter of the circle in primary ohms. The distance d between the center of the circle C and the impedance point Z_p is

$$d = \sqrt{(\Delta R)^2 + (\Delta X)^2}$$

where

$$\Delta R = R_p - R_c \quad \text{and} \quad \Delta X = X_p - X_c$$

as shown in Fig. 10.20. The value of d is compared to the radius r in per unit of the circle.

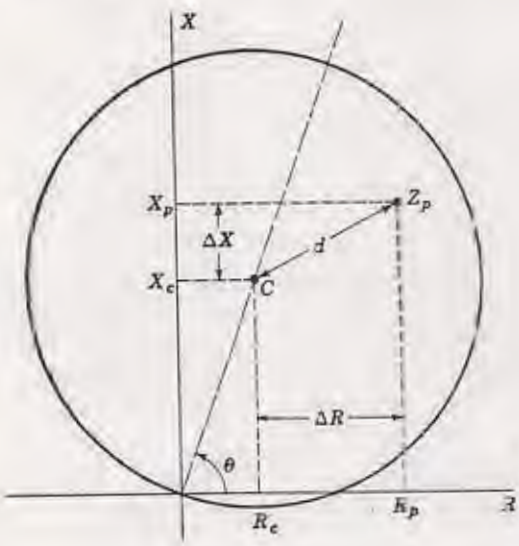

Fig. 10.20 Comparison of apparent impedance and distance relay operating characteristic.

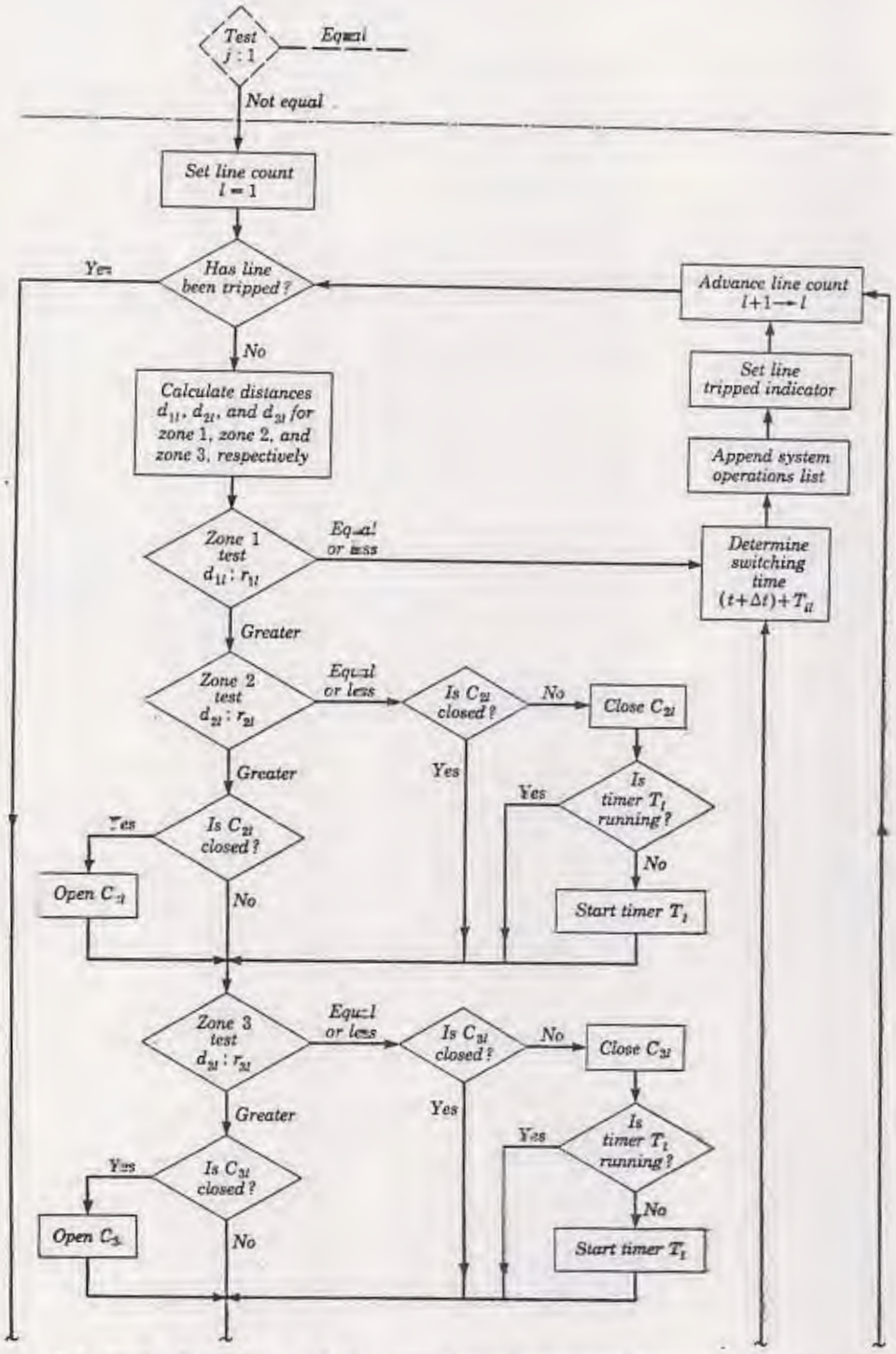

Fig. 10.21 Simulation of the operation of mho-type distance relays in a transient analysis.

The sequence of steps for simulating the operation of mho-type distance relays in a transient stability study is shown in Fig. 10.21. For a specified line l the apparent impedance calculated at $t + \Delta t$ is compared to the operating characteristic of each of the three zones. This is accomplished by calculating the distances d_{1l}, d_{2l}, and d_{3l} from the apparent impedance point to the centers of the circles for zones 1, 2, and 3, respectively. Each distance is compared to the radius of the appropriate circle, that is, d_{1l} is compared to r_{1l}; d_{2l} is compared to r_{2l}; and d_{3l} is compared to r_{3l}. If the apparent impedance is in zone 1 an immediate switching operation is initiated. If the apparent impedance is in zones 2 and 3, or zone 3, the corresponding contacts C_{2l} and C_{3l}, or C_{3l}, are closed and the timer T_l is started. When time is incremented by Δt in the transient calculations the relay timer T_l also must be advanced by Δt. When the timer reaches the time setting T_{2l} or T_{3l} for zone 2 or 3, respectively, and the corresponding contacts C_{2l} or C_{3l} are closed, a switching operation is initiated.

When an operation is initiated the switching time is determined by adding to $t + \Delta t$ the inherent relay and circuit breaker time T_a, that is, the time required for the relay and circuit breaker to disconnect the line.

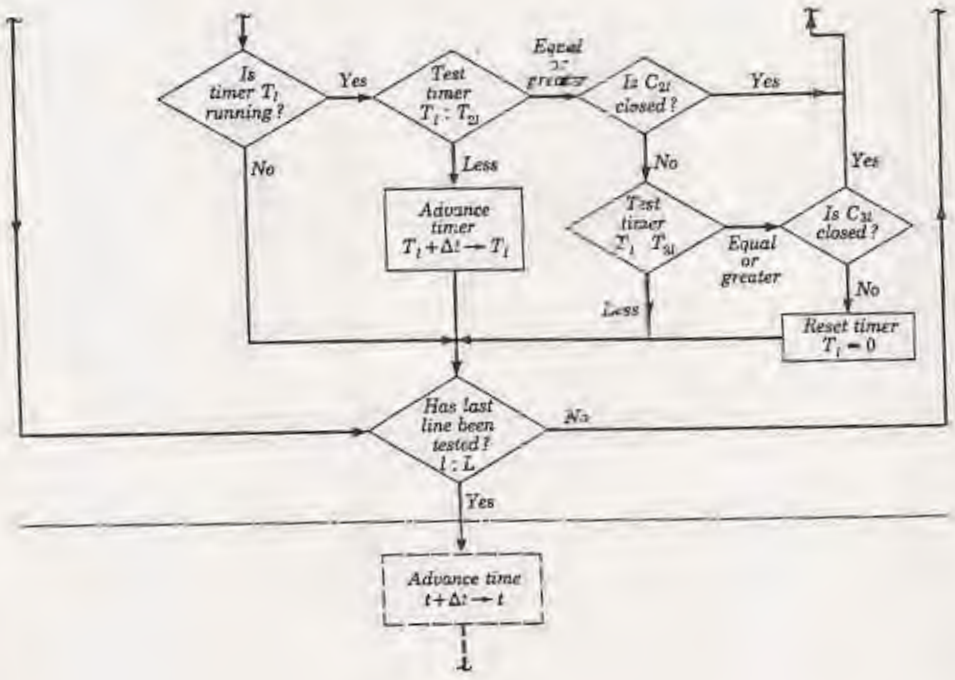

High-speed relays and circuit breakers operate in approximately 0.04 sec. The switching operation is effected in the step-by-step transient calculations at the scheduled time.

System operations

The system operatio
times during the tr

O ower Systems, Symmetrical
h Wiley & Sons, Inc., New York,

orks," John Wiley & Sons, Inc.,

o Power System Analysis,"
, 1953.
Power System Analysis,"
Y k, 1962.
etrical Components," McGraw-
3.

chapter 6
Short circuit studies

6.1 Introduction

Short circuit calculations provide currents and voltages on a power system during fault conditions. This information is required to design an adequate protective relaying system and to determine interrupting requirements for circuit breakers at each switching location. Relaying systems must recognize the existence of a fault and initiate circuit breaker operation to disconnect faulted facilities. This action is required to assure minimum disruption of electrical service and to limit damage in the faulted equipment. The currents and voltages resulting from various types of faults occurring at many locations throughout the power system must be calculated to provide sufficient data to develop an effective relaying and switching system. To obtain the required information a special purpose analog computer, called a network analyzer, was used extensively for short circuit studies before digital techniques were available.

The bus frame of reference in admittance form was employed in the first application of digital computers to short circuit studies. This method, which was patterned after similar techniques employed for load flow calculations, used an iterative technique (Coombe and Lewis, 1956). This required a complete iterative solution for each fault type and location. The procedure was time-consuming, particularly if, as was usually the case, the currents and voltages were required for a large number of fault locations. Consequently, this method was not adopted generally.

The development of techniques for applying a digital computer to form the bus impedance matrix made it feasible to use Thevenin's theorem for short circuit calculations. This approach provided an efficient means of determining short circuit currents and voltages because these values can be obtained with few arithmetic operations involving only related portions of the bus impedance matrix.

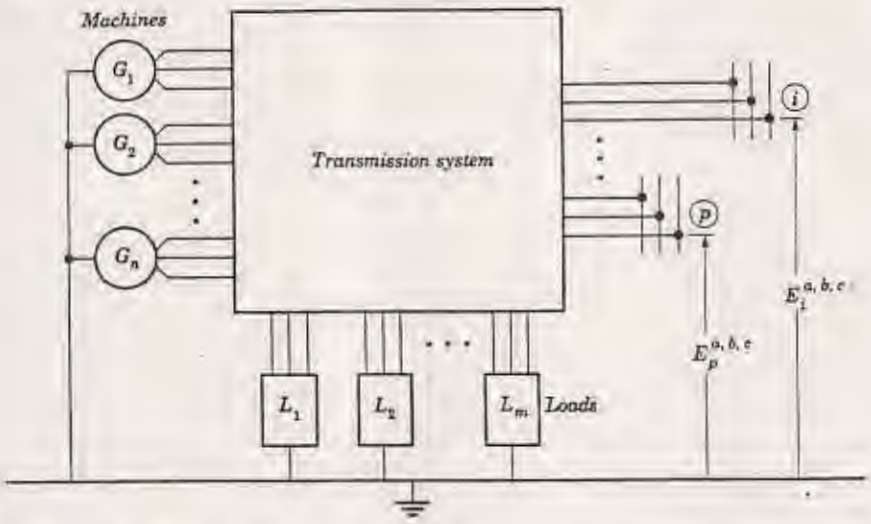

Fig. 6.1 Three-phase representation of a power system.

6.2 Short circuit calculations using Z_{BUS}

System representation

The three-phase representation of a power system under steady state condition is shown in Fig. 6.1. In general, sufficient accuracy in short circuit studies can be obtained with a simplified representation. The simplified three-phase representation is shown in Fig. 6.2 and is obtained by:

1. Representing each machine by a constant voltage behind the machine reactance, transient or subtransient
2. Neglecting shunt connections, e.g., loads, line charging, etc.
3. Setting all transformers at nominal taps

In many short circuit studies, particularly for high voltage systems, it is sufficient to represent transmission line and transformer impedances as real numbers equal to the corresponding reactances.

Fault currents and voltages

The use of the bus impedance matrix provides a convenient means of calculating short circuit currents and voltages when the ground is selected as reference. One of the distinct advantages is that, once the bus

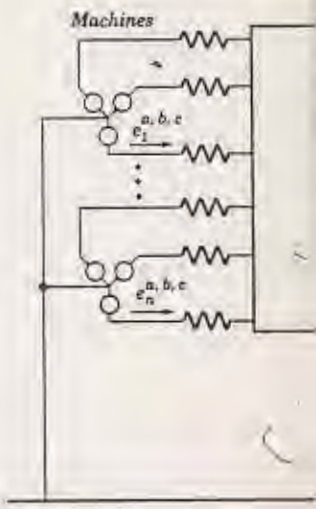

Fig. 6.2 Three-phase repr
studies.

impedance matrix is forn
directly to calculate the
types of faults and fault l

The representation o
Fig. 6.3. In this represe
orem, the internal impeda
including machine reacta
sented by the bus voltage

The performance equ

$$\bar{E}^{a,b,c}_{BUS(F)} = \bar{E}^{a,b,c}_{BUS(0)} - Z^{a,b,c}_{BU}$$

The unknown voltage vec

$$\bar{E}^{a,b,c}_{BUS(F)} = \begin{bmatrix} E^{a,b,c}_{1(F)} \\ \cdots \\ E^{a,b,c}_{p(F)} \\ \cdots \\ E^{a,b,c}_{n(F)} \end{bmatrix}$$

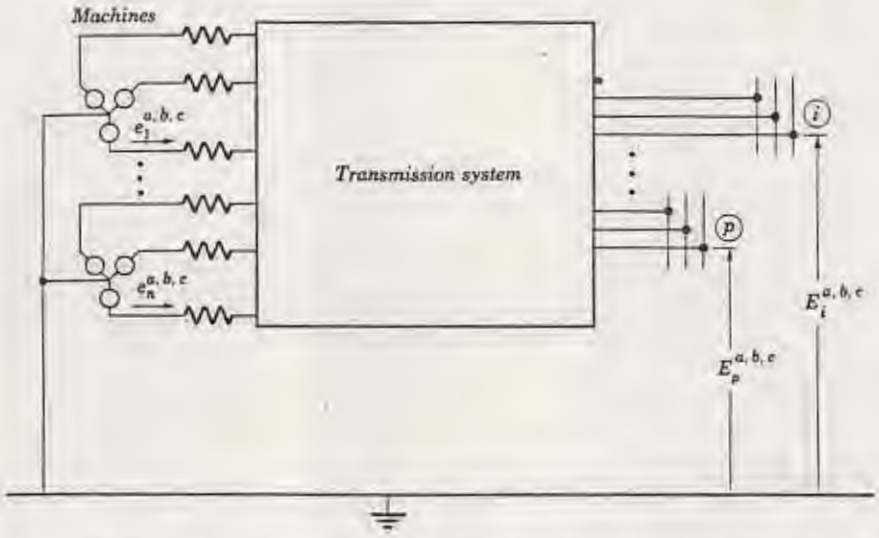

Fig. 6.2 Three-phase representation of a power system for short circuit studies.

impedance matrix is formed, the elements of this matrix can be used directly to calculate the currents and voltages associated with various types of faults and fault locations.

The representation of the system with a fault at bus p is shown in Fig. 6.3. In this representation, derived by means of Thevenin's theorem, the internal impedance is represented by the bus impedance matrix including machine reactances, and the open-circuited voltage is represented by the bus voltages prior to the fault.

The performance equation of the system during a fault is

$$\bar{E}^{a,b,c}_{BUS(F)} = \bar{E}^{a,b,c}_{BUS(0)} - Z^{a,b,c}_{BUS}\bar{I}^{a,b,c}_{BUS(F)} \tag{6.2.1}$$

The unknown voltage vector is

$$\bar{E}^{a,b,c}_{BUS(F)} = \begin{bmatrix} E^{a,b,c}_{1(F)} \\ \cdots \\ E^{a,b,c}_{p(F)} \\ \cdots \\ E^{a,b,c}_{n(F)} \end{bmatrix}$$

where the elements of $\bar{E}^{a,b,c}_{BUS(F)}$ are the three-phase voltage vectors $E^{a,b,c}_{i(F)}$ $\quad i = 1, 2, \ldots, n$

The known voltage vector prior to the fault is

$$\bar{E}^{a,b,c}_{BUS(0)} = \begin{bmatrix} E^{a,b,c}_{1(0)} \\ \cdots \\ E^{a,b,c}_{p(0)} \\ \cdots \\ E^{a,b,c}_{n(0)} \end{bmatrix}$$

The unknown bus current vector during a fault at bus p is

$$\bar{I}^{a,b,c}_{BUS(F)} = \begin{bmatrix} 0 \\ \cdots \\ 0 \\ I^{a,b,c}_{p(F)} \\ 0 \\ \cdots \\ 0 \end{bmatrix}$$

The three-phase bus impedance matrix is

$$Z^{a,b,c}_{BUS} = \begin{bmatrix} Z^{a,b,c}_{11} & \cdots & Z^{a,b,c}_{1p} & \cdots & Z^{a,b,c}_{1n} \\ \cdots & \cdots & \cdots & \cdots & \cdots \\ Z^{a,b,c}_{p1} & \cdots & Z^{a,b,c}_{pp} & \cdots & Z^{a,b,c}_{pn} \\ \cdots & \cdots & \cdots & \cdots & \cdots \\ Z^{a,b,c}_{n1} & \cdots & Z^{a,b,c}_{np} & \cdots & Z^{a,b,c}_{nn} \end{bmatrix}$$

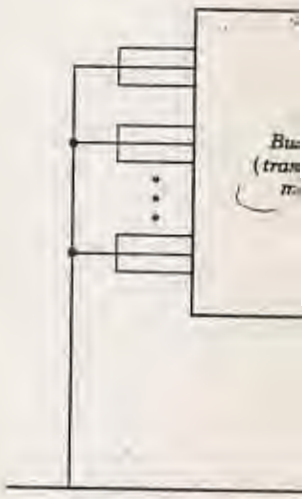

Fig. 6.3 Three-phase repr

where the elements of Z^{a}_{B}
(6.2.1) can be written as

$$E^{a,b,c}_{1(F)} = E^{a,b,c}_{1(0)} - Z^{a,b,c}_{1p} I^{a,b,c}_{p(F)}$$
$$E^{a,b,c}_{2(F)} = E^{a,b,c}_{2(0)} - Z^{a,b,c}_{2p} I^{a,b,c}_{p(F)}$$
$$\cdots\cdots\cdots\cdots\cdots\cdots$$
$$E^{a,b,c}_{p(F)} = E^{a,b,c}_{p(0)} - Z^{a,b,c}_{pp} I^{a,b,c}_{p(F)}$$
$$\cdots\cdots\cdots\cdots\cdots\cdots$$
$$E^{a,b,c}_{n(F)} = E^{a,b,c}_{n(0)} - Z^{a,b,c}_{np} I^{a,b,c}_{p(F)}$$

The three-phase volt

$$E^{a,b,c}_{p(F)} = Z^{a,b,c}_{F} I^{a,b,c}_{p(F)}$$

where $Z^{a,b,c}_{F}$ is the three-
elements of this 3×3 n
impedance. Substituting
tion of (6.2.2) becomes

$$Z^{a,b,c}_{F} I^{a,b,c}_{p(F)} = E^{a,b,c}_{p(0)} - Z^{a,b,c}_{pp}$$

Solving equation (6.2.4) f

$$I^{a,b,c}_{p(F)} = (Z^{a,b,c}_{F} + Z^{a,b,c}_{pp})^{-1} E$$

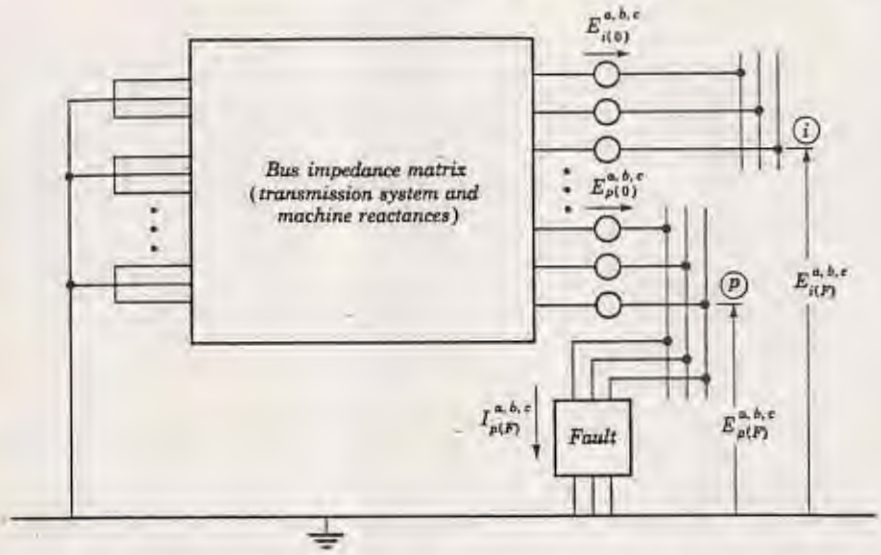

Fig. 6.3 Three-phase representation of a power system with a fault at bus p.

where the elements of $Z^{a,b,c}_{BUS}$ are matrices of dimension 3×3. Equation (6.2.1) can be written as follows:

$$
\begin{aligned}
E^{a,b,c}_{1(F)} &= E^{a,b,c}_{1(0)} - Z^{a,b,c}_{1p} I^{a,b,c}_{p(F)} \\
E^{a,b,c}_{2(F)} &= E^{a,b,c}_{2(0)} - Z^{a,b,c}_{2p} I^{a,b,c}_{p(F)} \\
&\cdots\cdots\cdots\cdots \\
E^{a,b,c}_{p(F)} &= E^{a,b,c}_{p(0)} - Z^{a,b,c}_{pp} I^{a,b,c}_{p(F)} \\
&\cdots\cdots\cdots\cdots \\
E^{a,b,c}_{n(F)} &= E^{a,b,c}_{n(0)} - Z^{a,b,c}_{np} I^{a,b,c}_{p(F)}
\end{aligned}
\tag{6.2.2}
$$

The three-phase voltage vector at the faulted bus p is, from Fig. 6.3,

$$E^{a,b,c}_{p(F)} = Z^{a,b,c}_{F} I^{a,b,c}_{p(F)} \tag{6.2.3}$$

where $Z^{a,b,c}_{F}$ is the three-phase impedance matrix for the fault. The elements of this 3×3 matrix depend on the type of fault and fault impedance. Substituting from equation (6.2.3) for $E^{a,b,c}_{p(F)}$, the pth equation of (6.2.2) becomes

$$Z^{a,b,c}_{F} I^{a,b,c}_{p(F)} = E^{a,b,c}_{p(0)} - Z^{a,b,c}_{pp} I^{a,b,c}_{p(F)} \tag{6.2.4}$$

Solving equation (6.2.4) for $I^{a,b,c}_{p(F)}$ yields

$$I^{a,b,c}_{p(F)} = (Z^{a,b,c}_{F} + Z^{a,b,c}_{pp})^{-1} E^{a,b,c}_{p(0)} \tag{6.2.5}$$

Substituting for $I^{a,b,c}_{p(F)}$ in equation (6.2.3), the three-phase voltage at the faulted bus p is

$$E^{a,b,c}_{p(F)} = Z^{a,b,c}_{F}(Z^{a,b,c}_{F} + Z^{a,b,c}_{pp})^{-1}E^{a,b,c}_{p(0)} \tag{6.2.6}$$

Similarly, the three-phase voltages at buses other than p can be obtained by substituting for $I^{a,b,c}_{p(F)}$ from equation (6.2.5). Then

$$E^{a,b,c}_{i(F)} = E^{a,b,c}_{i(0)} - Z^{a,b,c}_{ip}(Z^{a,b,c}_{F} + Z^{a,b,c}_{pp})^{-1}E^{a,b,c}_{p(0)} \qquad i \neq p \tag{6.2.7}$$

When it is desirable to express the parameters of the fault circuit in the admittance form, the three-phase fault current at bus p is

$$I^{a,b,c}_{p(F)} = Y^{a,b,c}_{F}E^{a,b,c}_{p(F)} \tag{6.2.8}$$

where $Y^{a,b,c}_{F}$ is the three-phase admittance matrix for the fault. Substituting $I^{a,b,c}_{p(F)}$ from equation (6.2.8), the pth equation of (6.2.2) becomes

$$E^{a,b,c}_{p(F)} = E^{a,b,c}_{p(0)} - Z^{a,b,c}_{pp}Y^{a,b,c}_{F}E^{a,b,c}_{p(F)} \tag{6.2.9}$$

Solving equation (6.2.9) for $E^{a,b,c}_{p(F)}$ yields

$$E^{a,b,c}_{p(F)} = (U + Z^{a,b,c}_{pp}Y^{a,b,c}_{F})^{-1}E^{a,b,c}_{p(0)} \tag{6.2.10}$$

Substituting for $E^{a,b,c}_{p(F)}$ in equation (6.2.8), the three-phase current at the faulted bus p is

$$I^{a,b,c}_{p(F)} = Y^{a,b,c}_{F}(U + Z^{a,b,c}_{pp}Y^{a,b,c}_{F})^{-1}E^{a,b,c}_{p(0)} \tag{6.2.11}$$

Similarly, the three-phase voltages at buses other than p can be obtained by substituting for $I^{a,b,c}_{p(F)}$ from equation (6.2.11). Then

$$E^{a,b,c}_{i(F)} = E^{a,b,c}_{i(0)} - Z^{a,b,c}_{ip}Y^{a,b,c}_{F}(U + Z^{a,b,c}_{pp}Y^{a,b,c}_{F})^{-1}E^{a,b,c}_{p(0)} \qquad i \neq p \tag{6.2.12}$$

Fault currents flowing through the elements of the network can be calculated with the bus voltages obtained from equations (6.2.6) and (6.2.7) or from equations (6.2.10) and (6.2.12). These currents in terms of the voltages across the elements of the network are

$$\bar{i}^{a,b,c}_{(F)} = [y^{a,b,c}]\bar{v}^{a,b,c}_{(F)}$$

where the elements of the current vector are

$$i^{a,b,c}_{ij(F)} = \begin{bmatrix} i^{a}_{ij(F)} \\ i^{b}_{ij(F)} \\ i^{c}_{ij(F)} \end{bmatrix}$$

the elements of the voltag

$$v^{a,b,c}_{ij(F)} = \begin{bmatrix} v^{a}_{ij(F)} \\ v^{b}_{ij(F)} \\ v^{c}_{ij(F)} \end{bmatrix}$$

and the elements of the pri

$$y^{a,b,c}_{ij,kl} = \begin{bmatrix} y^{aa}_{ij,kl} & y^{ab}_{ij,kl} & y^{ac}_{ij,k} \\ y^{ba}_{ij,kl} & y^{bb}_{ij,kl} & y^{bc}_{ij,k} \\ y^{ca}_{ij,kl} & y^{cb}_{ij,kl} & y^{cc}_{ij,k} \end{bmatrix}$$

where $y^{bc}_{ij,kl}$ is the mutual ad
i–j and phase c of network
network element i–j can be

$$i^{a,b,c}_{ij(F)} = \bar{y}^{a,b,c}_{ij,\rho\sigma}\bar{v}^{a,b,c}_{\rho\sigma(F)}$$

where $\rho\sigma$ refers to the eleme
to i–j. Since

$$\bar{v}^{a,b,c}_{\rho\sigma(F)} = \bar{E}^{a,b,c}_{\rho(F)} - \bar{E}^{a,b,c}_{\sigma(F)}$$

then equation (6.2.13) becor

$$i^{a,b,c}_{ij(F)} = \bar{y}^{a,b,c}_{ij,\rho\sigma}(\bar{E}^{a,b,c}_{\rho(F)} - \bar{E}^{a,b,c}_{\sigma(F)})$$

The formulas for fault
can be used for balanced and

6.3 Short circuit cal
balanced three-phase

Transformation to symm

The formulas developed in t
currents and voltages can be
work by using symmetrica

the elements of the voltage vector are

$$v^{a,b,c}_{ij(P)} = \begin{bmatrix} v^{a}_{ij(P)} \\ v^{b}_{ij(P)} \\ v^{c}_{ij(P)} \end{bmatrix}$$

and the elements of the primitive admittance matrix are

$$y^{a,b,c}_{ij,kl} = \begin{bmatrix} y^{aa}_{ij,kl} & y^{ab}_{ij,kl} & y^{ac}_{ij,kl} \\ y^{ba}_{ij,kl} & y^{bb}_{ij,kl} & y^{bc}_{ij,kl} \\ y^{ca}_{ij,kl} & y^{cb}_{ij,kl} & y^{cc}_{ij,kl} \end{bmatrix}$$

where $y^{bc}_{ij,kl}$ is the mutual admittance between phase b of network element i–j and phase c of network element k–l. The three-phase current in the network element i–j can be calculated from

$$i^{a,b,c}_{ij(P)} = \bar{y}^{a,b,c}_{ij,\rho\sigma}\, \bar{v}^{a,b,c}_{\rho\sigma(P)} \tag{6.2.13}$$

where $\rho\sigma$ refers to the element i–j as well as to elements mutually coupled to i–j. Since

$$\bar{v}^{a,b,c}_{\rho\sigma(P)} = \bar{E}^{a,b,c}_{\rho(P)} - \bar{E}^{a,b,c}_{\sigma(P)}$$

then equation (6.2.13) becomes

$$i^{a,b,c}_{ij(P)} = \bar{y}^{a,b,c}_{ij,\rho\sigma}(\bar{E}^{a,b,c}_{\rho(P)} - \bar{E}^{a,b,c}_{\sigma(P)}) \tag{6.2.14}$$

The formulas for fault currents and voltages derived in this section can be used for balanced and unbalanced three-phase short circuit studies.

6.3 Short circuit calculations for balanced three-phase network using Z_{BUS}

Transformation to symmetrical components

The formulas developed in the preceding section for calculation of fault currents and voltages can be simplified for a balanced three-phase network by using symmetrical components. The primitive impedance

matrix for a stationary balanced three-phase element is

$$z_{pq}^{a,b,c} = \begin{bmatrix} z_{pq}^{s} & z_{pq}^{m} & z_{pq}^{m} \\ z_{pq}^{m} & z_{pq}^{s} & z_{pq}^{m} \\ z_{pq}^{m} & z_{pq}^{m} & z_{pq}^{s} \end{bmatrix},$$

This matrix can be diagonalized by the transformation $(T_s^*)^t z_{pq}^{a,b,c} T_s$ into

$$z_{pq}^{0,1,2} = \begin{bmatrix} z_{pq}^{(0)} & & \\ & z_{pq}^{(1)} & \\ & & z_{pq}^{(2)} \end{bmatrix}$$

where $z_{pq}^{(0)}$, $z_{pq}^{(1)}$, and $z_{pq}^{(2)}$ are the zero, positive, and negative sequence impedances, respectively. The positive and negative sequence impedances for a stationary balanced three-phase element are equal. In addition, it is generally accepted that positive and negative sequence impedances for rotating elements can be assumed equal for short circuit calculations.

In a similar manner, each $y_{ij,kl}^{a,b,c}$ in the primitive admittance matrix and each $Z_{ij}^{a,b,c}$ in the bus impedance matrix can be diagonalized by the transformation matrix T_s to obtain, respectively,

$$y_{ij,kl}^{0,1,2} = \begin{bmatrix} y_{ij,kl}^{(0)} & & \\ & y_{ij,kl}^{(1)} & \\ & & y_{ij,kl}^{(2)} \end{bmatrix} \quad \text{and} \quad Z_{ij}^{0,1,2} = \begin{bmatrix} Z_{ij}^{(0)} & & \\ & Z_{ij}^{(1)} & \\ & & Z_{ij}^{(2)} \end{bmatrix}$$

It is customary to assume that all bus voltages prior to the fault are equal in magnitude and phase angle. Assuming the magnitude of the line-to-ground voltage $E_{i(0)}$ equal to one per unit, then the ith bus voltage before the fault is

$$E_{i(0)}^{a,b,c} = \begin{bmatrix} 1 \\ a^2 \\ a \end{bmatrix}$$

Transforming into symm

$E_{i(0)}^{0,1,2} = (T_s^*)^t E_{i(0)}^{a,b,c}$

then

$$E_{i(0)}^{0,1,2} = \begin{bmatrix} 0 \\ \sqrt{3} \\ 0 \end{bmatrix}$$

The fault impedance matri
$Z_F^{0,1,2}$. The resulting mat
fault impedance and adm
symmetrical components f

Similarly, the equatio
can be written in terms of
faulted bus p is

$I_{p(F)}^{0,1,2} = (Z_F^{0,1,2} + Z_{pp}^{0,1,2})^{-1}E$

or

$I_{p(F)}^{0,1,2} = Y_F^{0,1,2}(U + Z_{pp}^{0,1,2}Y$

The voltage at the faulted

$E_{p(F)}^{0,1,2} = Z_F^{0,1,2}(Z_F^{0,1,2} + Z_{pp}^{0,1}$

or

$E_{p(F)}^{0,1,2} = (U + Z_{pp}^{0,1,2}Y_F^{0,1,2})-$

The voltages at buses othe

$E_{i(F)}^{0,1,2} = E_{i(0)}^{0,1,2} - Z_{ip}^{0,1,2}(Z_F^{0,1}$

or

$E_{i(F)}^{0,1,2} = E_{i(0)}^{0,1,2} - Z_{ip}^{0,1,2}Y_F^{0,1,2}$

The fault current in the th

$i_{ij(F)}^{0,1,2} = \bar{y}_{ij,pq}^{0,1,2}(\bar{E}_{p(F)}^{0,1,2} - \bar{E}_{q(F)}^{0,1,2})$

Three-phase-to-ground f

Fault currents and voltag
obtained by substituting t

Transforming into symmetrical components, that is

$$E_{i(0)}^{0,1,2} = (T_s^*)^t E_{i(0)}^{a,b,c}$$

then

$$E_{i(0)}^{0,1,2} = \begin{bmatrix} 0 \\ \sqrt{3} \\ 0 \end{bmatrix}$$

The fault impedance matrix $Z_F^{a,b,c}$ can be transformed by T_s into the matrix $Z_F^{0,1,2}$. The resulting matrix is diagonal if the fault is balanced. The fault impedance and admittance matrices in terms of three-phase and symmetrical components for various types of faults are given in Table 6.1.

Similarly, the equations for calculating fault currents and voltages can be written in terms of symmetrical components. The current at the faulted bus p is

$$I_{p(F)}^{0,1,2} = (Z_F^{0,1,2} + Z_{pp}^{0,1,2})^{-1} E_{p(0)}^{0,1,2} \tag{6.3.1}$$

or

$$I_{p(F)}^{0,1,2} = Y_F^{0,1,2}(U + Z_{pp}^{0,1,2} Y_F^{0,1,2})^{-1} E_{p(0)}^{0,1,2} \tag{6.3.2}$$

The voltage at the faulted bus p is

$$E_{p(F)}^{0,1,2} = Z_F^{0,1,2}(Z_F^{0,1,2} + Z_{pp}^{0,1,2})^{-1} E_{p(0)}^{0,1,2} \tag{6.3.3}$$

or

$$E_{p(F)}^{0,1,2} = (U + Z_{pp}^{0,1,2} Y_F^{0,1,2})^{-1} E_{p(0)}^{0,1,2} \tag{6.3.4}$$

The voltages at buses other than p are

$$E_{i(F)}^{0,1,2} = E_{i(0)}^{0,1,2} - Z_{ip}^{0,1,2}(Z_F^{0,1,2} + Z_{pp}^{0,1,2})^{-1} E_{p(0)}^{0,1,2} \tag{6.3.5}$$

or

$$E_{i(F)}^{0,1,2} = E_{i(0)}^{0,1,2} - Z_{ip}^{0,1,2} Y_F^{0,1,2}(U + Z_{pp}^{0,1,2} Y_F^{0,1,2})^{-1} E_{p(0)}^{0,1,2} \tag{6.3.6}$$

The fault current in the three-phase element i–j is

$$i_{ij(F)}^{0,1,2} = \bar{y}_{ij,pq}^{0,1,2}(\bar{E}_{p(F)}^{0,1,2} - \bar{E}_{q(F)}^{0,1,2}) \tag{6.3.7}$$

Three-phase-to-ground fault

Fault currents and voltages for a three-phase-to-ground fault can be obtained by substituting the corresponding fault impedance matrix, in

Table 6.1 Fault impedance and admittance matrices

Type of fault	*Three-phase components* $Z_F^{a,b,c}$	*Three-phase components* $Y_F^{a,b,c}$	*Symmetrica* $Z_F^{0,1,2}$
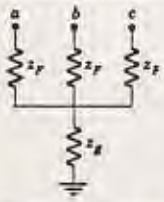 Three-phase-to-ground	$\begin{bmatrix} z_F+z_g & z_g & z_g \\ z_g & z_F+z_g & z_g \\ z_g & z_g & z_F+z_g \end{bmatrix}$	$\frac{1}{3}\begin{bmatrix} y_0+2y_F & y_0-y_F & y_0-y_F \\ y_0-y_F & y_0+2y_F & y_0-y_F \\ y_0-y_F & y_0-y_F & y_0+2y_F \end{bmatrix}$ where $y_0=\dfrac{1}{z_F+3z_g}$	$\begin{bmatrix} z_F+3z_g & 0 & 0 \\ 0 & z_F & 0 \\ 0 & 0 & z_F \end{bmatrix}$
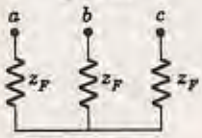 Three-phase	Not defined	$\frac{y_F}{3}\begin{bmatrix} 2 & -1 & -1 \\ -1 & 2 & -1 \\ -1 & -1 & 2 \end{bmatrix}$	$\begin{bmatrix} \infty & 0 & 0 \\ 0 & z_F & 0 \\ 0 & 0 & z_F \end{bmatrix}$
Line-to-ground	$\begin{bmatrix} z_F & 0 & 0 \\ 0 & \infty & 0 \\ 0 & 0 & \infty \end{bmatrix}$	$\begin{bmatrix} y_F & 0 & 0 \\ 0 & 0 & 0 \\ 0 & 0 & 0 \end{bmatrix}$	Not defined
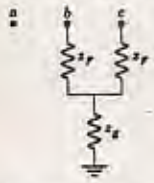 Line-to-line-to-ground	$\begin{bmatrix} \infty & 0 & 0 \\ 0 & z_F+z_g & z_g \\ 0 & z_g & z_F+z_g \end{bmatrix}$	$\begin{bmatrix} 0 & 0 & 0 \\ 0 & \dfrac{z_F+z_g}{z_F^2+2z_Fz_g} & \dfrac{-z_g}{z_F^2+2z_Fz_g} \\ 0 & \dfrac{-z_g}{z_F^2+2z_Fz_g} & \dfrac{z_F+z_g}{z_F^2+2z_Fz_g} \end{bmatrix}$	Not defined $3(z_F^2+$
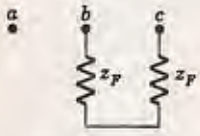 Line-to-line	Not defined	$\frac{y_F}{2}\begin{bmatrix} 0 & 0 & 0 \\ 0 & 1 & -1 \\ 0 & -1 & 1 \end{bmatrix}$	Not defined

Symmetrical components

$Z_F^{0,1,2}$	$Y_F^{0,1,2}$
$\begin{bmatrix} z_F + 3z_g & 0 & 0 \\ 0 & z_F & 0 \\ 0 & 0 & z_F \end{bmatrix}$	$\begin{bmatrix} y_0 & 0 & 0 \\ 0 & y_F & 0 \\ 0 & 0 & y_F \end{bmatrix}$ where $y_0 = \dfrac{1}{z_F + 3z_g}$
$\begin{bmatrix} \infty & 0 & 0 \\ 0 & z_F & 0 \\ 0 & 0 & z_F \end{bmatrix}$	$y_F \begin{bmatrix} 0 & 0 & 0 \\ 0 & 1 & 0 \\ 0 & 0 & 1 \end{bmatrix}$
Not defined	$\dfrac{y_F}{3} \begin{bmatrix} 1 & 1 & 1 \\ 1 & 1 & 1 \\ 1 & 1 & 1 \end{bmatrix}$
Not defined	$\dfrac{1}{3(z_F^2 + 2z_F z_g)} \begin{bmatrix} 2z_F & -z_F & -z_F \\ -z_F & 2z_F + 3z_g & -(z_F+3z_g) \\ -z_F & -(z_F+3z_g) & 2z_F + 3z_g \end{bmatrix}$
Not defined	$\dfrac{y_F}{2} \begin{bmatrix} 0 & 0 & 0 \\ 0 & 1 & -1 \\ 0 & -1 & 1 \end{bmatrix}$

terms of symmetrical components into equations (6.3.1), (6.3.3), and (6.3.5). Both sides of the resulting equations can be premultiplied by T_s to obtain the corresponding formulas in terms of phase components.

The fault impedance matrix for a three-phase-to-ground fault is, from Table 6.1,

$$Z_p^{0,1,2} = \begin{bmatrix} z_F + 3z_g & & \\ & z_F & \\ & & z_F \end{bmatrix} \tag{6.3.8}$$

The three-phase fault current and the bus voltages are obtained by substituting, from equation (6.3.8), for $Z_p^{0,1,2}$ in equations (6.3.1), (6.3.3), and (6.3.5). The current at the faulted bus p is

$$\begin{bmatrix} I_{p(F)}^{(0)} \\ I_{p(F)}^{(1)} \\ I_{p(F)}^{(2)} \end{bmatrix} = \left(\begin{bmatrix} z_F + 3z_g + Z_{pp}^{(0)} & & \\ & z_F + Z_{pp}^{(1)} & \\ & & z_F + Z_{pp}^{(1)} \end{bmatrix} \right)^{-1} \begin{bmatrix} 0 \\ \sqrt{3} \\ 0 \end{bmatrix}$$

which reduces to

$$\begin{bmatrix} I_{p(F)}^{(0)} \\ I_{p(F)}^{(1)} \\ I_{p(F)}^{(2)} \end{bmatrix} = \begin{bmatrix} 0 \\ \dfrac{\sqrt{3}}{z_F + Z_{pp}^{(1)}} \\ 0 \end{bmatrix} \tag{6.3.9}$$

The phase components of the fault current at bus p can be obtained by premultiplying both sides of equation (6.3.9) by T_s. These currents are

$$\begin{bmatrix} I_{p(F)}^{a} \\ I_{p(F)}^{b} \\ I_{p(F)}^{c} \end{bmatrix} = \frac{1}{z_F + Z_{pp}^{(1)}} \begin{bmatrix} 1 \\ a^2 \\ a \end{bmatrix}$$

The voltage at the faulted b

$$\begin{bmatrix} E_{p(F)}^{(0)} \\ E_{p(F)}^{(1)} \\ E_{p(F)}^{(2)} \end{bmatrix} = \begin{bmatrix} z_F + 3z_g & \\ & z \\ & \end{bmatrix}$$

which reduces to

$$\begin{bmatrix} E_{p(F)}^{(0)} \\ E_{p(F)}^{(1)} \\ E_{p(F)}^{(2)} \end{bmatrix} = \begin{bmatrix} 0 \\ \dfrac{\sqrt{3}\, z_F}{z_F + Z_{pp}^{(1)}} \\ 0 \end{bmatrix}$$

The phase components of th

$$\begin{bmatrix} E_{p(F)}^{a} \\ E_{p(F)}^{b} \\ E_{p(F)}^{c} \end{bmatrix} = \frac{z_F}{z_F + Z_{pp}^{(1)}} \begin{bmatrix} 1 \\ a^2 \\ a \end{bmatrix}$$

The voltages at buses other

$$\begin{bmatrix} E_{i(F)}^{(0)} \\ E_{i(F)}^{(1)} \\ E_{i(F)}^{(2)} \end{bmatrix} = \begin{bmatrix} 0 \\ \sqrt{3} \\ 0 \end{bmatrix} - \begin{bmatrix} Z_{ip}^{(0)} \\ \\ \\ \end{bmatrix}$$

The voltage at the faulted bus p is

$$\begin{bmatrix} E^{(0)}_{p(F)} \\ E^{(1)}_{p(F)} \\ E^{(2)}_{p(F)} \end{bmatrix} = \begin{bmatrix} z_F + 3z_g & & \\ & z_F & \\ & & z_F \end{bmatrix} \begin{bmatrix} 0 \\ \dfrac{\sqrt{3}}{z_F + Z^{(1)}_{pp}} \\ 0 \end{bmatrix}$$

which reduces to

$$\begin{bmatrix} E^{(0)}_{p(F)} \\ E^{(1)}_{p(F)} \\ E^{(2)}_{p(F)} \end{bmatrix} = \begin{bmatrix} 0 \\ \dfrac{\sqrt{3}\, z_F}{z_F + Z^{(1)}_{pp}} \\ 0 \end{bmatrix}$$

The phase components of the fault voltage are

$$\begin{bmatrix} E^{a}_{p(F)} \\ E^{b}_{p(F)} \\ E^{c}_{p(F)} \end{bmatrix} = \frac{z_F}{z_F + Z^{(1)}_{pp}} \begin{bmatrix} 1 \\ a^2 \\ a \end{bmatrix}$$

The voltages at buses other than p are

$$\begin{bmatrix} E^{(0)}_{i(F)} \\ E^{(1)}_{i(F)} \\ E^{(2)}_{i(F)} \end{bmatrix} = \begin{bmatrix} 0 \\ \sqrt{3} \\ 0 \end{bmatrix} - \begin{bmatrix} Z^{(0)}_{ip} & & \\ & Z^{(1)}_{ip} & \\ & & Z^{(2)}_{ip} \end{bmatrix} \begin{bmatrix} 0 \\ \dfrac{\sqrt{3}}{z_F + Z^{(1)}_{pp}} \\ 0 \end{bmatrix}$$

which reduces to

$$\begin{bmatrix} E^{(0)}_{i(F)} \\ E^{(1)}_{i(F)} \\ E^{(2)}_{i(F)} \end{bmatrix} = \sqrt{3} \begin{bmatrix} 0 \\ 1 - \dfrac{Z^{(1)}_{ip}}{z_F + Z^{(1)}_{pp}} \\ 0 \end{bmatrix}$$

In phase components,

$$\begin{bmatrix} E^{a}_{i(F)} \\ E^{b}_{i(F)} \\ E^{c}_{i(F)} \end{bmatrix} = \left(1 - \frac{Z^{(1)}_{ip}}{z_F + Z^{(1)}_{pp}}\right) \begin{bmatrix} 1 \\ a^2 \\ a \end{bmatrix}$$

Table 6.2 Current and voltage formulas for three-phase-to-ground fault at bus p

Three-phase components	*Symmetrical components*
$I^{a,b,c}_{p(F)} = \dfrac{E_{p(0)}}{z_F + Z^{(1)}_{pp}} \begin{bmatrix} 1 \\ a^2 \\ a \end{bmatrix}$	$I^{0,1,2}_{p(F)} = \dfrac{\sqrt{3}\, E_{p(0)}}{z_F + Z^{(1)}_{pp}} \begin{bmatrix} 0 \\ 1 \\ 0 \end{bmatrix}$
$E^{a,b,c}_{p(F)} = \dfrac{z_F E_{p(0)}}{z_F + Z^{(1)}_{pp}} \begin{bmatrix} 1 \\ a^2 \\ a \end{bmatrix}$	$E^{0,1,2}_{p(F)} = \dfrac{\sqrt{3}\, z_F E_{p(0)}}{z_F + Z^{(1)}_{pp}} \begin{bmatrix} 0 \\ 1 \\ 0 \end{bmatrix}$
$E^{a,b,c}_{i(F)} = \left(E_{i(0)} - \dfrac{Z^{(1)}_{ip} E_{p(0)}}{z_F + Z^{(1)}_{pp}}\right) \begin{bmatrix} 1 \\ a^2 \\ a \end{bmatrix}$, $i \neq p$	$E^{0,1,2}_{i(F)} = \sqrt{3}\left(E_{i(0)} - \dfrac{Z^{(1)}_{ip} E_{p(0)}}{z_F + Z^{(1)}_{pp}}\right) \begin{bmatrix} 0 \\ 1 \\ 0 \end{bmatrix}$, $i \neq p$

The formulas derived in th
line-to-ground voltage was
The formulas in Table 6.2 i
which can be set at any des

The currents in the ne
lated from equation (6.3.7)
voltages are zero for a three
in the positive sequence net
then equation (6.3.7) reduc

$$\begin{bmatrix} i^{(0)}_{ij(F)} \\ i^{(1)}_{ij(F)} \\ i^{(2)}_{ij(F)} \end{bmatrix} = \begin{bmatrix} 0 \\ y^{(1)}_{ij,ii}(E^{(1)}_{i(F)} - E \\ 0 \end{bmatrix}$$

In phase components,

$$\begin{bmatrix} i^{a}_{ij(F)} \\ i^{b}_{ij(F)} \\ i^{c}_{ij(F)} \end{bmatrix} = \frac{1}{\sqrt{3}}\, y^{(1)}_{ij,ii}(E^{(1)}_{i(F)} -$$

Line-to-ground fault

The fault admittance matr
from Table 6.

$$Y^{0,1,2}_{F} = \frac{y_F}{3} \begin{bmatrix} 1 & 1 & 1 \\ 1 & 1 & 1 \\ 1 & 1 & 1 \end{bmatrix}$$

The fault current and the bu
equation (6.3.10) for $Y^{0,1,2}_{F}$ i

The formulas derived in this section are summarized in Table 6.2. The line-to-ground voltage was assumed to be one per unit in the derivations. The formulas in Table 6.2 include the term for the line-to-ground voltage which can be set at any desired per unit value.

The currents in the network elements during the fault can be calculated from equation (6.3.7). Since the zero and negative sequence bus voltages are zero for a three-phase fault and there is no mutual coupling in the positive sequence network, that is, $y^{(1)}_{ij,\rho\sigma} = 0$ except when $\rho\sigma = ij$, then equation (6.3.7) reduces to

$$\begin{bmatrix} i^{(0)}_{ij(F)} \\ i^{(1)}_{ij(F)} \\ i^{(2)}_{ij(F)} \end{bmatrix} = \begin{bmatrix} 0 \\ y^{(1)}_{ij,ij}(E^{(1)}_{i(F)} - E^{(1)}_{j(F)}) \\ 0 \end{bmatrix}$$

In phase components,

$$\begin{bmatrix} i^{a}_{ij(F)} \\ i^{b}_{ij(F)} \\ i^{c}_{ij(F)} \end{bmatrix} = \frac{1}{\sqrt{3}}\, y^{(1)}_{ij,ij}(E^{(1)}_{i(F)} - E^{(1)}_{j(F)}) \begin{bmatrix} 1 \\ a^2 \\ a \end{bmatrix}$$

Line-to-ground fault

The fault admittance matrix for a line-to-ground fault in phase a is, from Table 6.1,

$$Y^{0,1,2}_F = \frac{y_F}{3} \begin{bmatrix} 1 & 1 & 1 \\ 1 & 1 & 1 \\ 1 & 1 & 1 \end{bmatrix} \tag{6.3.10}$$

The fault current and the bus voltages are obtained by substituting from equation (6.3.10) for $Y^{0,1,2}_F$ in equations (6.3.2), (6.3.4), and (6.3.6). The

current at the faulted bus p is

$$\begin{bmatrix} I^{(0)}_{p(F)} \\ I^{(1)}_{p(F)} \\ I^{(2)}_{p(F)} \end{bmatrix} = \frac{y_F}{3} \begin{bmatrix} 1 & 1 & 1 \\ 1 & 1 & 1 \\ 1 & 1 & 1 \end{bmatrix} \begin{pmatrix} 1 + Z^{(0)}_{pp}\frac{y_F}{3} & Z^{(0)}_{pp}\frac{y_F}{3} & Z^{(0)}_{pp}\frac{y_F}{3} \\ Z^{(1)}_{pp}\frac{y_F}{3} & 1 + Z^{(1)}_{pp}\frac{y_F}{3} & Z^{(1)}_{pp}\frac{y_F}{3} \\ Z^{(1)}_{pp}\frac{y_F}{3} & Z^{(1)}_{pp}\frac{y_F}{3} & 1 + Z^{(1)}_{pp}\frac{y_F}{3} \end{pmatrix}^{-1} \begin{bmatrix} 0 \\ \sqrt{3} \\ 0 \end{bmatrix}$$

which reduces to

$$\begin{bmatrix} I^{(0)}_{p(F)} \\ I^{(1)}_{p(F)} \\ I^{(2)}_{p(F)} \end{bmatrix} = \frac{\sqrt{3}}{Z^{(0)}_{pp} + 2Z^{(1)}_{pp} + 3z_F} \begin{bmatrix} 1 \\ 1 \\ 1 \end{bmatrix} \tag{6.3.11}$$

The phase components of the fault current at bus p can be obtained by premultiplying both sides of equation (6.3.11) by T_s. These currents are

$$\begin{bmatrix} I^{a}_{p(F)} \\ I^{b}_{p(F)} \\ I^{c}_{p(F)} \end{bmatrix} = \begin{bmatrix} \dfrac{3}{Z^{(0)}_{pp} + 2Z^{(1)}_{pp} + 3z_F} \\ 0 \\ 0 \end{bmatrix}$$

The voltage at the faulted bus p is

$$\begin{bmatrix} E^{(0)}_{p(F)} \\ E^{(1)}_{p(F)} \\ E^{(2)}_{p(F)} \end{bmatrix} = \begin{pmatrix} 1 + Z^{(0)}_{pp}\frac{y_F}{3} & Z^{(0)}_{pp}\frac{y_F}{3} & Z^{(0)}_{pp}\frac{y_F}{3} \\ Z^{(1)}_{pp}\frac{y_F}{3} & 1 + Z^{(1)}_{pp}\frac{y_F}{3} & Z^{(1)}_{pp}\frac{y_F}{3} \\ Z^{(1)}_{pp}\frac{y_F}{3} & Z^{(1)}_{pp}\frac{y_F}{3} & 1 + Z^{(1)}_{pp}\frac{y_F}{3} \end{pmatrix}^{-1} \begin{bmatrix} 0 \\ \sqrt{3} \\ 0 \end{bmatrix}$$

which reduces to

$$\begin{bmatrix} E^{(0)}_{p(F)} \\ E^{(1)}_{p(F)} \\ E^{(2)}_{p(F)} \end{bmatrix} = \frac{\sqrt{3}}{Z^{(0)}_{pp} + 2Z^{(1)}_{pp} + 3z_F} \begin{bmatrix} \\ Z^{(0)}_{pp} + \\ \end{bmatrix}$$

The phase components of the fault vo

$$\begin{bmatrix} E^{a}_{p(F)} \\ E^{b}_{p(F)} \\ E^{c}_{p(F)} \end{bmatrix} = \begin{bmatrix} \dfrac{3z_F}{Z^{(0)}_{pp} + 2Z^{(1)}_{pp} + 3z_F} \\ a^2 - \dfrac{Z^{(0)}_{pp} - Z^{(1)}_{pp}}{Z^{(0)}_{pp} + 2Z^{(1)}_{pp} + 3z_F} \\ a - \dfrac{Z^{(0)}_{pp} - Z^{(1)}_{pp}}{Z^{(0)}_{pp} - 2Z^{(1)}_{pp} + 3z_F} \end{bmatrix}$$

The voltages at buses other than p a

$$\begin{bmatrix} E^{(0)}_{i(F)} \\ E^{(1)}_{i(F)} \\ E^{(2)}_{i(F)} \end{bmatrix} = \begin{bmatrix} 0 \\ \sqrt{3} \\ 0 \end{bmatrix} - \begin{bmatrix} Z^{(0)}_{iF} & & \\ & Z^{(1)}_{iF} & \\ & & Z \end{bmatrix}$$

which reduces to

$$\begin{bmatrix} E^{(0)}_{i(F)} \\ E^{(1)}_{i(F)} \\ E^{(2)}_{i(F)} \end{bmatrix} = \begin{bmatrix} 0 \\ \sqrt{3} \\ 0 \end{bmatrix} - \frac{\sqrt{3}}{Z^{(0)}_{pp} - 2Z^{(1)}_{pp} +}$$

In phase components,

$$\begin{bmatrix} E^{a}_{i(F)} \\ E^{b}_{i(F)} \\ E^{c}_{i(F)} \end{bmatrix} = \begin{bmatrix} 1 \\ a^2 \\ a \end{bmatrix} - \frac{1}{Z^{(0)}_{pp} + 2Z^{(1)}_{pp} +}$$

which reduces to

$$\begin{bmatrix} E^{(0)}_{p(F)} \\ E^{(1)}_{p(F)} \\ E^{(2)}_{p(F)} \end{bmatrix} = \frac{\sqrt{3}}{Z^{(0)}_{pp} + 2Z^{(1)}_{pp} + 3z_F} \begin{bmatrix} -Z^{(0)}_{pp} \\ Z^{(0)}_{pp} + Z^{(1)}_{pp} + 3z_F \\ -Z^{(1)}_{pp} \end{bmatrix}$$

The phase components of the fault voltage are

$$\begin{bmatrix} E^{a}_{p(F)} \\ E^{b}_{p(F)} \\ E^{c}_{p(F)} \end{bmatrix} = \begin{bmatrix} \dfrac{3z_F}{Z^{(0)}_{pp} + 2Z^{(1)}_{pp} + 3z_F} \\ a^2 - \dfrac{Z^{(0)}_{pp} - Z^{(1)}_{pp}}{Z^{(0)}_{pp} + 2Z^{(1)}_{pp} + 3z_F} \\ a - \dfrac{Z^{(0)}_{pp} - Z^{(1)}_{pp}}{Z^{(0)}_{pp} + 2Z^{(1)}_{pp} + 3z_F} \end{bmatrix}$$

The voltages at buses other than p are

$$\begin{bmatrix} E^{(0)}_{i(F)} \\ E^{(1)}_{i(F)} \\ E^{(2)}_{i(F)} \end{bmatrix} = \begin{bmatrix} 0 \\ \sqrt{3} \\ 0 \end{bmatrix} - \begin{bmatrix} Z^{(0)}_{ip} & & \\ & Z^{(1)}_{ip} & \\ & & Z^{(1)}_{ip} \end{bmatrix} \frac{\sqrt{3}}{Z^{(0)}_{pp} + 2Z^{(1)}_{pp} + 3z_F} \begin{bmatrix} 1 \\ 1 \\ 1 \end{bmatrix}$$

which reduces to

$$\begin{bmatrix} E^{(0)}_{i(F)} \\ E^{(1)}_{i(F)} \\ E^{(2)}_{i(F)} \end{bmatrix} = \begin{bmatrix} 0 \\ \sqrt{3} \\ 0 \end{bmatrix} - \frac{\sqrt{3}}{Z^{(0)}_{pp} + 2Z^{(1)}_{pp} + 3z_F} \begin{bmatrix} Z^{(0)}_{ip} \\ Z^{(1)}_{ip} \\ Z^{(1)}_{ip} \end{bmatrix}$$

In phase components,

$$\begin{bmatrix} E^{a}_{i(F)} \\ E^{b}_{i(F)} \\ E^{c}_{i(F)} \end{bmatrix} = \begin{bmatrix} 1 \\ a^2 \\ a \end{bmatrix} - \frac{1}{Z^{(0)}_{pp} + 2Z^{(1)}_{pp} + 3z_F} \begin{bmatrix} Z^{(0)}_{ip} + 2Z^{(1)}_{ip} \\ Z^{(0)}_{ip} - Z^{(1)}_{ip} \\ Z^{(0)}_{ip} - Z^{(1)}_{ip} \end{bmatrix}$$

Table 6.3 Current and voltage formulas for line-to-ground fault (phase a) at bus p

Three-phase components	*Symmetrical components*
$I^{a,b,c}_{p(F)} = \dfrac{3E_{p(0)}}{Z^{(0)}_{pp} + 2Z^{(1)}_{pp} + 3z_F} \begin{bmatrix} 1 \\ 0 \\ 0 \end{bmatrix}$	$I^{0,1,2}_{p(F)} = \dfrac{\sqrt{3}\,E_{p(0)}}{Z^{(0)}_{pp} + 2Z^{(1)}_{pp} + 3z_F} \begin{bmatrix} 1 \\ 1 \\ 1 \end{bmatrix}$
$E^{a,b,c}_{p(F)} = E_{p(0)} \begin{bmatrix} \dfrac{3z_F}{Z^{(0)}_{pp} + 2Z^{(1)}_{pp} + 3z_F} \\ a^2 - \dfrac{Z^{(0)}_{pp} - Z^{(1)}_{pp}}{Z^{(0)}_{pp} + 2Z^{(1)}_{pp} + 3z_F} \\ a - \dfrac{Z^{(0)}_{pp} - Z^{(1)}_{pp}}{Z^{(0)}_{pp} + 2Z^{(1)}_{pp} + 3z_F} \end{bmatrix}$	$E^{0,1,2}_{p(F)} = \dfrac{\sqrt{3}\,E_{p(0)}}{Z^{(0)}_{pp} + 2Z^{(1)}_{pp} + 3z_F} \begin{bmatrix} -Z^{(0)}_{pp} \\ Z^{(0)}_{pp} + Z^{(1)}_{pp} + 3z_F \\ -Z^{(1)}_{pp} \end{bmatrix}$
$E^{a,b,c}_{i(F)} = E_{i(0)} \begin{bmatrix} 1 \\ a^2 \\ a \end{bmatrix} - E_{p(0)} \begin{bmatrix} \dfrac{Z^{(0)}_{ip} + 2Z^{(1)}_{ip}}{Z^{(0)}_{pp} + 2Z^{(1)}_{pp} + 3z_F} \\ \dfrac{Z^{(0)}_{ip} - Z^{(1)}_{ip}}{Z^{(0)}_{pp} + 2Z^{(1)}_{pp} + 3z_F} \\ \dfrac{Z^{(0)}_{ip} - Z^{(1)}_{ip}}{Z^{(0)}_{pp} + 2Z^{(1)}_{pp} + 3z_F} \end{bmatrix}$, $i \neq p$	$E^{0,1,2}_{i(F)} = E_{i(0)} \begin{bmatrix} 0 \\ \sqrt{3} \\ 0 \end{bmatrix} - \dfrac{\sqrt{3}\,E_{p(0)}}{Z^{(0)}_{pp} + 2Z^{(1)}_{pp} + 3z_F} \begin{bmatrix} Z^{(0)}_{ip} \\ Z^{(1)}_{ip} \\ Z^{(1)}_{ip} \end{bmatrix}$, $i \neq p$

The formulas derived in this section are summarized in Table 6.3. The line-to-ground voltage was assumed to be one per unit in the derivations. The formulas in Table 6.3 include the term for the line-to-ground voltage which can be set at any desired per unit value.

The currents in the network elements during the fault can be calculated from equation (6.3.7).

6.4 · Example of short circuit calculations using Z_{BUS}

The method of calculating short circuit currents and voltages will be illustrated for the sample system shown in Fig. 6.4*a*. The oriented connected graph of this system is shown in Fig. 6.4*b*. This sample system is identical to the one used in Sec. 5.9.

Problem

a. Using symmetrical co
phase fault at bus 4:
i. Total fault curre
ii. Bus voltages dur
iii. Short circuit cur
b. Using symmetrical co
ground fault at bus 4:
i. Total fault curre
ii. Bus voltages dur
iii. Short circuit cur
c. Determine the maxim
cuit breaker *A* must inter

Solution

a. The bus impedance m
determined to calculate t
using symmetrical compon
ances of the network eleme
impedances of the networ
transformation matrix T_s,
$z^{0,1,2}_{pq} = (T^*_s)^t z^{a,b,c}_{pq} T_s$
Assuming the impedance r
using the average value
sequence impedances are s

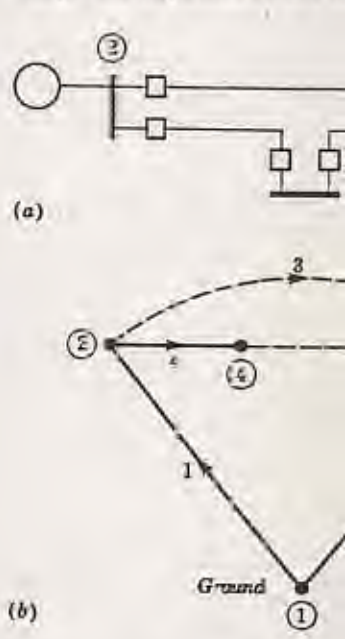

Problem

a. Using symmetrical components, calculate the following for a three-phase fault at bus 4:

i. Total fault current
ii. Bus voltages during fault
iii. Short circuit currents in lines connected to the faulted bus

b. Using symmetrical components, calculate the following for a line-to-ground fault at bus 4:

i. Total fault current
ii. Bus voltages during fault
iii. Short circuit currents in lines connected to the faulted bus.

c. Determine the maximum three-phase short circuit current that circuit breaker A must interrupt for a fault on the line side of the breaker.

Solution

a. The bus impedance matrix in terms of sequence quantities must be determined to calculate three-phase and line-to-ground fault currents using symmetrical components. Table 5.2 shows the three-phase impedances of the network elements. The zero, positive, and negative sequence impedances of the network elements can be obtained by means of the transformation matrix T_s, that is,

$$z_{pq}^{0,1,2} = (T_s^*)^t z_{pq}^{a,b,c} T_s$$

Assuming the impedance matrices of the generators are symmetric and using the average value -0.0225 for the off-diagonal elements, the sequence impedances are shown in Table 6.4.

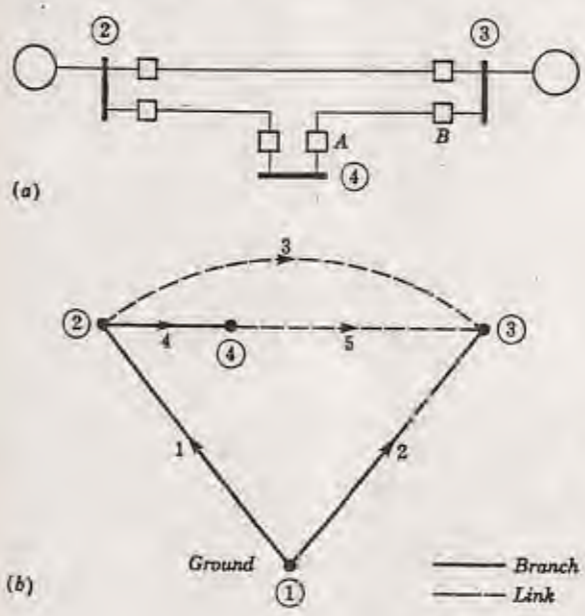

Fig. 6.4 Sample system for short circuit calculations. (a) Single line diagram of three-phase system; (b) oriented connected graph.

Table 6.4 Zero, positive, and negative sequence impedances for sample system

Element number	Bus code p–q	Self: Impedance $z^{0,1,2}_{pq,pq}$	Mutual: Bus code r–s	Mutual: Impedance $z^{0,1,2}_{pq,rs}$
1	1–2	$\begin{bmatrix} 0.035 & & \\ & 0.1025 & \\ & & 0.1025 \end{bmatrix}$		
2	1–3	$\begin{bmatrix} 0.035 & & \\ & 0.1025 & \\ & & 0.1025 \end{bmatrix}$		
3	2–3	$\begin{bmatrix} 2.50 & & \\ & 1.00 & \\ & & 1.00 \end{bmatrix}$		
4	2–4	$\begin{bmatrix} 1.00 & & \\ & 0.40 & \\ & & 0.40 \end{bmatrix}$	2–3	$\begin{bmatrix} 0.60 & & \\ & & \\ & & \end{bmatrix}$
5	4–3	$\begin{bmatrix} 1.50 & & \\ & 0.60 & \\ & & 0.60 \end{bmatrix}$	2–3	$\begin{bmatrix} 0.90 & & \\ & & \\ & & \end{bmatrix}$

Since there is no coupling between the sequence impedances, the bus impedance matrix in terms of sequence quantities can be obtained by forming the positive, negative, and zero sequence bus impedance matrices independently. First, the positive sequence bus impedance matrix will be formed.

Step 1. Start with e
The positive sequence bus

$$Z^{(1)}_{BUS} = \begin{array}{c|c} & ② \\ \hline ② & 0.1025 \end{array}$$

Step 2. Add element

$$Z^{(1)}_{BUS} = \begin{array}{c|cc} & ② & ③ \\ \hline ② & 0.1025 & \\ ③ & & 0.102 \end{array}$$

Step 3. Add element

$Z_{24} = Z_{42} = Z_{22}$
$Z_{34} = Z_{43} = 0$
$Z_{44} = Z_{24} + z_{24,24}$

and

$$Z^{(1)}_{BUS} = \begin{array}{c|cc} & ② & ③ \\ \hline ② & 0.1025 & \\ ③ & & 0.1025 \\ ④ & 0.1025 & \end{array}$$

Step 4. Add element 5
ments of the row and colum

$Z_{12} = Z_{21} = Z_{42} - Z_{32}$
$Z_{13} = Z_{31} = Z_{43} - Z_{33}$
$Z_{14} = Z_{41} = Z_{44} - Z_{34}$
$Z_{11} = Z_{41} - Z_{31} + z_{43,43}$

and the augmented matrix is

$$\begin{array}{c|cc} & ② & ③ \\ \hline ② & 0.1025 & \\ ③ & & 0.1025 \\ ④ & 0.1025 & \\ l & 0.1025 & -0.1025 \end{array}$$

Step 1. Start with element 1, the branch from $p = 1$ to $q = 2$. The positive sequence bus impedance matrix for the partial network is

$$Z_{BUS}^{(1)} = \begin{array}{c|c|} & ② \\ \hline ② & 0.1025 \\ \hline \end{array}$$

Step 2. Add element 2, the branch from $p = 1$ to $q = 3$. Then,

$$Z_{BUS}^{(1)} = \begin{array}{c|c|c|} & ② & ③ \\ \hline ② & 0.1025 & \\ \hline ③ & & 0.1025 \\ \hline \end{array}$$

Step 3. Add element 4, the branch from $p = 2$ to $q = 4$. Thus,

$$Z_{24} = Z_{42} = Z_{22}$$
$$Z_{34} = Z_{43} = 0$$
$$Z_{44} = Z_{24} + z_{24,24}$$

and

$$Z_{BUS}^{(1)} = \begin{array}{c|c|c|c|} & ② & ③ & ④ \\ \hline ② & 0.1025 & & 0.1025 \\ \hline ③ & & 0.1025 & \\ \hline ④ & 0.1025 & & 0.5025 \\ \hline \end{array}$$

Step 4. Add element 5, the link from $p = 4$ to $q = 3$. The elements of the row and column corresponding to the fictitious node l are

$$Z_{l2} = Z_{2l} = Z_{42} - Z_{22}$$
$$Z_{l3} = Z_{3l} = Z_{43} - Z_{23}$$
$$Z_{l4} = Z_{4l} = Z_{44} - Z_{24}$$
$$Z_{ll} = Z_{4l} - Z_{3l} + z_{43,43}$$

and the augmented matrix is

	②	③	④	l
②	0.1025		0.1025	0.1025
③		0.1025		−0.1025
④	0.1025		0.5025	0.5025
l	0.1025	−0.1025	0.5025	1.2050

To eliminate the lth row and column the elements of the augmented matrix are modified as follows:

$$Z'_{22} = Z_{22} - Z_{2l}Z_{ll}^{-1}Z_{l2}$$
$$Z'_{33} = Z_{33} - Z_{3l}Z_{ll}^{-1}Z_{l3}$$
$$Z'_{44} = Z_{44} - Z_{4l}Z_{ll}^{-1}Z_{l4}$$
$$Z'_{23} = Z'_{32} = Z_{23} - Z_{2l}Z_{ll}^{-1}Z_{l3}$$
$$Z'_{24} = Z'_{42} = Z_{24} - Z_{2l}Z_{ll}^{-1}Z_{l4}$$
$$Z'_{34} = Z'_{43} = Z_{34} - Z_{3l}Z_{ll}^{-1}Z_{l4}$$

Thus,

$$Z_{BUS}^{(1)} = \begin{array}{c|ccc} & ② & ③ & ④ \\ \hline ② & 0.0938 & 0.0087 & 0.0598 \\ ③ & 0.0087 & 0.0938 & 0.0427 \\ ④ & 0.0598 & 0.0427 & 0.2930 \end{array}$$

Step 5. Add element 3, the link from $p = 2$ to $q = 3$. As in the previous step,

$$Z_{l2} = Z_{2l} = Z_{22} - Z_{32}$$
$$Z_{l3} = Z_{3l} = Z_{23} - Z_{33}$$
$$Z_{l4} = Z_{4l} = Z_{24} - Z_{34}$$
$$Z_{ll} = Z_{2l} - Z_{3l} + z_{23,23}$$

$$\begin{array}{c|cccc} & ② & ③ & ④ & l \\ \hline ② & 0.0938 & 0.0087 & 0.0598 & 0.0851 \\ ③ & 0.0087 & 0.0938 & 0.0427 & -0.0851 \\ ④ & 0.0598 & 0.0427 & 0.2930 & 0.0171 \\ l & 0.0851 & -0.0851 & 0.0171 & 1.1702 \end{array}$$

Eliminating the lth row and column, the final positive sequence bus impedance matrix is

$$Z_{BUS}^{(1)} = \begin{array}{c|ccc} & ② & ③ & ④ \\ \hline ② & 0.0876 & 0.0149 & 0.0586 \\ ③ & 0.0149 & 0.0876 & 0.0439 \\ ④ & 0.0586 & 0.0439 & 0.2928 \end{array}$$

Since positive and negative
positive and negative seque

The procedure for forn
is identical for the first fou
matrix of the partial netwo

$$Z_{BUS}^{(0)} = \begin{array}{c|cc} & ② & ③ \\ \hline ② & 0.0345 & 0.000 \\ ③ & 0.0005 & 0.034 \\ ④ & 0.0209 & 0.014 \end{array}$$

Step 5. Add element
coupled with the elements 4
corresponding to the fictitio

$$Z_{l2} = Z_{22} - Z_{32} + \frac{y_{23,24}(Z_{22}}{}$$

$$Z_{l3} = Z_{23} - Z_{33} + \frac{y_{23,24}(Z_{23}}{}$$

$$Z_{l4} = Z_{24} - Z_{34} + \frac{y_{23,24}(Z_{24}}{}$$

$$Z_{ll} = Z_{21} - Z_{31} + \frac{1 + y_{23,24}}{}$$

The zero sequence primitive

	1–2	1–3	2–3
1–2	0.035		
1–3		0.035	
2–3			2.500
2–4			0.600
4–3			0.900

Since positive and negative primitive sequence impedances are equal, the positive and negative sequence bus impedance matrices are equal.

The procedure for forming the zero sequence bus impedance matrix is identical for the first four steps. The zero sequence bus impedance matrix of the partial network, before adding element 3, is

$$Z_{BUS}^{(0)} = \begin{array}{c|ccc} & ② & ③ & ④ \\ \hline ② & 0.0345 & 0.0005 & 0.0209 \\ ③ & 0.0005 & 0.0345 & 0.0141 \\ ④ & 0.0209 & 0.0141 & 0.6182 \end{array}$$

Step 5. Add element 3, the link from $p = 2$ to $q = 3$, which is coupled with the elements 4 and 5. The elements of the row and column corresponding to the fictitious node l are

$$Z_{l2} = Z_{22} - Z_{32} + \frac{y_{23,24}(Z_{22} - Z_{42}) + y_{23,43}(Z_{42} - Z_{32})}{y_{23,23}}$$

$$Z_{l3} = Z_{23} - Z_{33} + \frac{y_{23,24}(Z_{23} - Z_{43}) + y_{23,43}(Z_{43} - Z_{33})}{y_{23,23}}$$

$$Z_{l4} = Z_{24} - Z_{34} + \frac{y_{23,24}(Z_{24} - Z_{44}) + y_{23,43}(Z_{44} - Z_{34})}{y_{23,23}}$$

$$Z_{ll} = Z_{2l} - Z_{3l} + \frac{1 + y_{23,24}(Z_{2l} - Z_{4l}) + y_{23,43}(Z_{4l} - Z_{3l})}{y_{23,23}}$$

The zero sequence primitive impedance matrix is

	1–2	1–3	2–3	2–4	4–3
1–2	0.035				
1–3		0.035			
2–3			2.500	0.600	0.900
2–4			0.600	1.000	
4–3			0.900		1.500

The new element 3 is coupled only to elements 4 and 5 and it is sufficient to invert the submatrix containing the coupled elements.

$$[z^{(0)}_{pq,pq}] = \begin{array}{c|c|c|c|} & 2\text{–}3 & 2\text{–}4 & 4\text{–}3 \\ \hline 2\text{–}3 & 2.500 & 0.600 & 0.900 \\ \hline 2\text{–}4 & 0.600 & 1.000 & \\ \hline 4\text{–}3 & 0.900 & & 1.500 \\ \hline \end{array}$$

Thus,

$$[y^{(0)}_{pq,pq}] = \begin{array}{c|c|c|c|} & 2\text{–}3 & 2\text{–}4 & 4\text{–}3 \\ \hline 2\text{–}3 & 0.625 & -0.375 & -0.375 \\ \hline 2\text{–}4 & -0.375 & 1.225 & 0.225 \\ \hline 4\text{–}3 & -0.375 & 0.225 & 0.892 \\ \hline \end{array}$$

and the augmented matrix is

$$\begin{array}{c|c|c|c|c|} & ② & ③ & ④ & l \\ \hline ② & 0.0345 & 0.0005 & 0.0209 & 0.0136 \\ \hline ③ & 0.0005 & 0.0345 & 0.0141 & -0.0136 \\ \hline ④ & 0.0209 & 0.0141 & 0.6182 & 0.0027 \\ \hline l & 0.0136 & -0.0136 & 0.0027 & 1.6109 \\ \hline \end{array}$$

Eliminating the lth row and column, the final zero sequence bus impedance matrix is

$$Z^{(0)}_{BUS} = \begin{array}{c|c|c|c|} & ② & ③ & ④ \\ \hline ② & 0.0344 & 0.0006 & 0.0209 \\ \hline ③ & 0.0006 & 0.0344 & 0.0141 \\ \hline ④ & 0.0209 & 0.0141 & 0.6182 \\ \hline \end{array}$$

Combining the elements
bus impedance matrix is

$$Z^{0,1,2}_{BUS} = \begin{array}{c|c|c|c|} & 0 & ③1 & 2 \\ \hline 0 & 0.0344 & & \\ \hline ③1 & & 0.0876 & \\ \hline 2 & & & 0 \\ \hline 0 & 0.0006 & & \\ \hline ③1 & & 0.0849 & \\ \hline 2 & & & 0 \\ \hline 0 & 0.0209 & & \\ \hline ④1 & & 0.0586 & \\ \hline 2 & & & 0 \\ \hline \end{array}$$

Assuming the fault i
three-phase fault at bus 4

$$I^{0,1,2}_{4(F)} = \begin{array}{|c|} \hline 0 \\ \hline \dfrac{\sqrt{3}}{Z^{(1)}_{44} + z_F} \\ \hline 0 \\ \hline \end{array} =$$

The phase components of

$$I^{a,b,c}_{4(F)} = T_s I^{0,1,2}_{4(F)} = 3.42$$

Bus voltages during fault are

$$E^{0,1,2}_{4(F)} = \begin{bmatrix} 0 \\ 0 \\ 0 \end{bmatrix}$$

$$E^{0,1,2}_{2(F)} = \begin{bmatrix} 0 \\ \sqrt{3} - \dfrac{Z^{(1)}_{24}\sqrt{3}}{Z^{(1)}_{44} + z_F} \\ 0 \end{bmatrix} = \begin{bmatrix} 0 \\ \sqrt{3} - \dfrac{0.0586}{0.2928}\sqrt{3} \\ 0 \end{bmatrix}$$

$$= \begin{bmatrix} 0 \\ 0.80\sqrt{3} \\ 0 \end{bmatrix}$$

$$E^{0,1,2}_{3(F)} = \begin{bmatrix} 0 \\ \sqrt{3} - \dfrac{Z^{(1)}_{34}\sqrt{3}}{Z^{(1)}_{44} + z_F} \\ 0 \end{bmatrix} = \begin{bmatrix} 0 \\ \sqrt{3} - \dfrac{0.0439}{0.2928}\sqrt{3} \\ 0 \end{bmatrix}$$

$$= \begin{bmatrix} 0 \\ 0.85\sqrt{3} \\ 0 \end{bmatrix}$$

The phase componen

$$E^{a,b,c}_{4(F)} = T_s E^{0,1,2}_{4(F)} = \begin{bmatrix} 0 \\ 0 \\ 0 \end{bmatrix}$$

$$E^{a,b,c}_{2(F)} = T_s E^{0,1,2}_{2(F)} = 0.8$$

$$E^{a,b,c}_{3(F)} = T_s E^{0,1,2}_{3(F)} = 0.8$$

The short circuit curr

$$i^{0,1,2}_{42(F)} = \begin{bmatrix} 0 \\ y^{(1)}_{43,43}(E^{(1)}_{4(F)} - \\ 0 \end{bmatrix}$$

$$= \begin{bmatrix} 0 \\ -1.42\sqrt{3} \\ 0 \end{bmatrix}$$

The phase components of the voltages are

$$E^{a,b,c}_{4(F)} = T_s E^{0,1,2}_{4(F)} = \begin{bmatrix} 0 \\ 0 \\ 0 \end{bmatrix}$$

$$E^{a,b,c}_{2(F)} = T_s E^{0,1,2}_{2(F)} = 0.80 \begin{bmatrix} 1 \\ a^2 \\ a \end{bmatrix}$$

$$E^{a,b,c}_{3(F)} = T_s E^{0,1,2}_{3(F)} = 0.85 \begin{bmatrix} 1 \\ a^2 \\ a \end{bmatrix}$$

The short circuit currents in the lines connected to the faulted bus are

$$i^{0,1,2}_{43(F)} = \begin{bmatrix} 0 \\ y^{(1)}_{43,43}(E^{(1)}_{4(F)} - E^{(1)}_{3(F)}) \\ 0 \end{bmatrix} = \begin{bmatrix} 0 \\ \frac{1}{0.60}(0 - 0.85\sqrt{3}) \\ 0 \end{bmatrix}$$

$$= \begin{bmatrix} 0 \\ -1.42\sqrt{3} \\ 0 \end{bmatrix}$$

$$I_{24(F)}^{0,1,2} = \begin{bmatrix} 0 \\ y_{24,24}^{(1)}(E_{2(F)}^{(1)} - E_{4(F)}^{(1)}) \\ 0 \end{bmatrix} = \begin{bmatrix} 0 \\ \frac{1}{0.40}(0.80\sqrt{3} - 0) \\ 0 \end{bmatrix}$$

$$= \begin{bmatrix} 0 \\ 2.00\sqrt{3} \\ 0 \end{bmatrix}$$

The phase components of these currents are

$$I_{42(F)}^{a,b,c} = T_s I_{42(F)}^{0,1,2} = -1.42 \begin{bmatrix} 1 \\ a^2 \\ a \end{bmatrix}$$

$$I_{24(F)}^{a,b,c} = T_s I_{24(F)}^{0,1,2} = 2.00 \begin{bmatrix} 1 \\ a^2 \\ a \end{bmatrix}$$

b. The fault current for
fault impedance, is

$$I_{4(F)}^{0,1,2} = \frac{\sqrt{3}}{Z_{44}^{(0)} + 2Z_{44}^{(1)} + 3z}$$

$$= \begin{bmatrix} 0.33\sqrt{3} \\ 0.33\sqrt{3} \\ 0.83\sqrt{3} \end{bmatrix}$$

The phase components of

$$I_{4(F)}^{a,b,c} = T_s I_{4(F)}^{0,1,2} = \begin{bmatrix} 2.49 \\ 0 \\ 0 \end{bmatrix}$$

Bus voltages during the fa

$$E_{4(F)}^{0,1,2} = \frac{\sqrt{3}}{Z_{44}^{(0)} + 2Z_{44}^{(1)} + 3z_F}$$

$$= \begin{bmatrix} -0.5131\sqrt{3} \\ 0.7561\sqrt{3} \\ -0.2430\sqrt{3} \end{bmatrix}$$

b. The fault current for a line-to-ground fault at bus 4, assuming zero fault impedance, is

$$I_{4(F)}^{0,1,2} = \frac{\sqrt{3}}{Z_{44}^{(0)} + 2Z_{44}^{(1)} + 3z_F} \begin{bmatrix} 1 \\ 1 \\ 1 \end{bmatrix} = \frac{\sqrt{3}}{0.6182 + 0.5856} \begin{bmatrix} 1 \\ 1 \\ 1 \end{bmatrix}$$

$$= \begin{bmatrix} 0.83\sqrt{3} \\ 0.83\sqrt{3} \\ 0.83\sqrt{3} \end{bmatrix}$$

The phase components of the total fault current are

$$I_{4(F)}^{a,b,c} = T_s I_{4(F)}^{0,1,2} = \begin{bmatrix} 2.49 \\ 0 \\ 0 \end{bmatrix}$$

Bus voltages during the fault are

$$E_{4(F)}^{0,1,2} = \frac{\sqrt{3}}{Z_{44}^{(0)} + 2Z_{44}^{(1)} + 3z_F} \begin{bmatrix} -Z_{44}^{(0)} \\ Z_{44}^{(0)} + Z_{44}^{(1)} \\ -Z_{44}^{(1)} \end{bmatrix} = 0.83\sqrt{3} \begin{bmatrix} -0.6182 \\ 0.9110 \\ -0.2928 \end{bmatrix}$$

$$= \begin{bmatrix} -0.5131\sqrt{3} \\ 0.7561\sqrt{3} \\ -0.2430\sqrt{3} \end{bmatrix}$$

$$E^{0,1,2}_{2(F)} = \begin{bmatrix} 0 \\ \sqrt{3} \\ 0 \end{bmatrix} - \frac{\sqrt{3}}{Z^{(0)}_{44} + 2Z^{(1)}_{44} + 3z_F} \begin{bmatrix} Z^{(0)}_{42} \\ Z^{(1)}_{42} \\ Z^{(1)}_{42} \end{bmatrix}$$

$$= \begin{bmatrix} 0 \\ \sqrt{3} \\ 0 \end{bmatrix} - 0.83\sqrt{3} \begin{bmatrix} 0.0209 \\ 0.0586 \\ 0.0586 \end{bmatrix}$$

$$= \begin{bmatrix} -0.0173\sqrt{3} \\ 0.9514\sqrt{3} \\ -0.0486\sqrt{3} \end{bmatrix}$$

$$E^{0,1,3}_{3(F)} = \begin{bmatrix} 0 \\ \sqrt{3} \\ 0 \end{bmatrix} - \frac{\sqrt{3}}{Z^{(0)}_{44} + 2Z^{(1)}_{44} + 3z_F} \begin{bmatrix} Z^{(0)}_{43} \\ Z^{(1)}_{43} \\ Z^{(1)}_{43} \end{bmatrix}$$

$$= \begin{bmatrix} 0 \\ \sqrt{3} \\ 0 \end{bmatrix} - 0.83\sqrt{3} \begin{bmatrix} 0.0141 \\ 0.0439 \\ 0.0439 \end{bmatrix}$$

$$= \begin{bmatrix} -0.0117\sqrt{3} \\ 0.9636\sqrt{3} \\ -0.0364\sqrt{3} \end{bmatrix}$$

The phase components of

$$E^{a,b,c}_{2(F)} = \begin{bmatrix} \frac{3z_F}{Z^{(0)}_{44} + 2Z^{(1)}_{44}} \\ a^2 - \frac{Z^{(0)}_{44} -}{Z^{(0)}_{44} + 2Z} \\ a - \frac{Z^{(0)}_{44} -}{Z^{(0)}_{44} + 2Z} \end{bmatrix}$$

$$= \begin{bmatrix} 0 \\ -0.77 - j0.866 \\ -0.77 + j0.866 \end{bmatrix}$$

$$E^{a,b,c}_{3(F)} = \begin{bmatrix} 1 \\ a^2 \\ a \end{bmatrix} - \begin{bmatrix} \frac{Z}{Z^{(0)}_{44} +} \\ \frac{Z}{Z^{(0)}_{44} +} \\ \frac{Z}{Z^{(0)}_{44} +} \end{bmatrix}$$

$$= \begin{bmatrix} 1 \\ a^2 \\ a \end{bmatrix} - \begin{bmatrix} \frac{0.0209}{0.6182} \\ \frac{0.0209}{0.6182} \\ \frac{0.0209}{0.6182} \end{bmatrix}$$

The phase components of the voltages are

$$E_{4(F)}^{a,b,c} = \begin{bmatrix} \dfrac{3z_F}{Z_{44}^{(0)} + 2Z_{44}^{(1)} + 3z_F} \\ a^2 - \dfrac{Z_{44}^{(0)} - Z_{44}^{(1)}}{Z_{44}^{(0)} + 2Z_{44}^{(1)} + 3z_F} \\ a - \dfrac{Z_{44}^{(0)} - Z_{44}^{(1)}}{Z_{44}^{(0)} + 2Z_{44}^{(1)} + 3z_F} \end{bmatrix} = \begin{bmatrix} 0 \\ a^2 - \dfrac{0.6182 - 0.2928}{0.6182 + 0.5856} \\ a - \dfrac{0.6182 - 0.2928}{0.6182 + 0.5856} \end{bmatrix}$$

$$= \begin{bmatrix} 0 \\ -0.77 - j0.866 \\ -0.77 + j0.866 \end{bmatrix}$$

$$E_{2(F)}^{a,b,c} = \begin{bmatrix} 1 \\ a^2 \\ a \end{bmatrix} - \begin{bmatrix} \dfrac{Z_{42}^{(0)} + 2Z_{42}^{(1)}}{Z_{44}^{(0)} + 2Z_{44}^{(1)} + 3z_F} \\ \dfrac{Z_{42}^{(0)} - Z_{42}^{(1)}}{Z_{44}^{(0)} + 2Z_{44}^{(1)} + 3z_F} \\ \dfrac{Z_{42}^{(0)} - Z_{42}^{(1)}}{Z_{44}^{(0)} + 2Z_{44}^{(1)} + 3z_F} \end{bmatrix}$$

$$= \begin{bmatrix} 1 \\ a^2 \\ a \end{bmatrix} - \begin{bmatrix} \dfrac{0.0209 + 0.1172}{0.6182 + 0.5856} \\ \dfrac{0.0209 - 0.0586}{0.6182 + 0.5856} \\ \dfrac{0.0209 - 0.0586}{0.6182 + 0.5856} \end{bmatrix} = \begin{bmatrix} 0.8853 + j0 \\ -0.4687 - j0.866 \\ -0.4687 + j0.866 \end{bmatrix}$$

$$E^{a,b,c}_{3(F)} = \begin{bmatrix} 1 \\ a^2 \\ a \end{bmatrix} - \begin{bmatrix} \dfrac{Z^{(0)}_{43} + 2Z^{(1)}_{43}}{Z^{(0)}_{44} + 2Z^{(1)}_{44} + 3z_F} \\ \dfrac{Z^{(0)}_{43} - Z^{(1)}_{43}}{Z^{(0)}_{44} + 2Z^{(1)}_{44} + 3z_F} \\ \dfrac{Z^{(0)}_{43} - Z^{(1)}_{43}}{Z^{(0)}_{44} + 2Z^{(1)}_{44} + 3z_F} \end{bmatrix} = \begin{bmatrix} 1 \\ a^2 \\ a \end{bmatrix} - \begin{bmatrix} \dfrac{0.0141 + 0.0878}{0.6182 + 0.5856} \\ \dfrac{0.0141 - 0.0439}{0.6182 + 0.5856} \\ \dfrac{0.0141 - 0.0439}{0.6182 - 0.5856} \end{bmatrix}$$

$$= \begin{bmatrix} 0.9154 + j0 \\ -0.4752 - j0.866 \\ -0.4752 + j0.866 \end{bmatrix}$$

Short circuit currents in the lines connected to the faulted bus are

$$i^{0,1,2}_{32(F)} = \begin{bmatrix} y^{(0)}_{43,42}(E^{(0)}_{4(F)} - E^{(0)}_{3(F)}) + y^{(0)}_{43,23}(E^{(0)}_{2(F)} - E^{(0)}_{3(F)}) + y^{(0)}_{43,24}(E^{(0)}_{2(F)} - E^{(0)}_{4(F)}) \\ y^{(1)}_{43,42}(E^{(1)}_{4(F)} - E^{(1)}_{3(F)}) \\ y^{(2)}_{43,42}(E^{(2)}_{4(F)} - E^{(2)}_{3(F)}) \end{bmatrix}$$

$$= \sqrt{3} \begin{bmatrix} 0.32(-0.5131 + 0.0117) + (-0.375)(-0.0173 + 0.0117) + 0.225(-0.0173 + 0.5131) \\ \dfrac{1}{0.6}(0.7561 - 0.9636) \\ \dfrac{1}{0.6}(-0.2430 + 0.0364) \end{bmatrix}$$

$$= \begin{bmatrix} -0.33\sqrt{3} \\ -0.34\sqrt{3} \\ -0.34\sqrt{3} \end{bmatrix}$$

$$i^{0,1,2}_{24(F)} = \begin{bmatrix} y^{(0)}_{24,34}(E^{(0)}_{3(F)} - E^{(0)}_{4(F)}) + \\ \\ \\ \end{bmatrix}$$

$$= \sqrt{3} \begin{bmatrix} 0.225(-0.0173 + 0.51 \\ \\ \dfrac{1}{0.} \\ \dfrac{1}{0.4} \end{bmatrix}$$

$$= \begin{bmatrix} 0.50\sqrt{3} \\ 0.49\sqrt{3} \\ 0.49\sqrt{3} \end{bmatrix}$$

The phase components of the c
bus are

$$i^{a,b,c}_{42(F)} = T_s i^{0,1,2}_{42(F)} = \begin{bmatrix} -1.02 \\ 0 \\ 0 \end{bmatrix}$$

c. The fault currents occurrin
can be calculated by assuming
electrically equivalent. When
opens before breaker B, the i
current at bus 4 less the fault

$$i^{0,1,2}_{24(F)} = \begin{bmatrix} y^{(0)}_{24,24}(E^{(0)}_{2(F)} - E^{(0)}_{4(F)}) + y^{(0)}_{24,43}(E^{(0)}_{4(F)} - E^{(0)}_{3(F)}) + y^{(0)}_{24,23}(E^{(0)}_{2(F)} - E^{(0)}_{3(F)}) \\ y^{(1)}_{24,24}(E^{(1)}_{2(F)} - E^{(1)}_{4(F)}) \\ y^{(2)}_{24,24}(E^{(2)}_{2(F)} - E^{(2)}_{4(F)}) \end{bmatrix}$$

$$= \sqrt{3} \begin{bmatrix} 1.225(-0.0173 + 0.5131) + 0.225(-0.5131 + 0.0117) + (-0.375)(-0.0173 + 0.0117) \\ \frac{1}{0.4}(0.9514 - 0.7561) \\ \frac{1}{0.4}(-0.0486 + 0.2430) \end{bmatrix}$$

$$= \begin{bmatrix} 0.50\sqrt{3} \\ 0.49\sqrt{3} \\ 0.49\sqrt{3} \end{bmatrix}$$

The phase components of the currents in the lines connected to the fault bus are

$$i^{a,b,c}_{43(F)} = T_s i^{0,1,2}_{43(F)} = \begin{bmatrix} -1.02 \\ 0 \\ 0 \end{bmatrix} \quad \text{and} \quad i^{a,b,c}_{24(F)} = T_s i^{0,1,2}_{24(F)} = \begin{bmatrix} 1.47 \\ 0 \\ 0 \end{bmatrix}$$

c. The fault currents occurring for a fault on the line side of breaker A can be calculated by assuming the fault on bus 4, since both locations are electrically equivalent. When this type of fault occurs and breaker A opens before breaker B, the interrupted current will be the total fault current at bus 4 less the fault contribution flowing from bus 3 over line 5.

This current is

$$I^{a,b,c}_{4(F)} - z^{a,b,c}_{34(F)} = 3.42 \begin{bmatrix} 1 \\ a^2 \\ a \end{bmatrix} - 1.42 \begin{bmatrix} 1 \\ a^2 \\ a \end{bmatrix}$$

$$= 2.00 \begin{bmatrix} 1 \\ a^2 \\ a \end{bmatrix}$$

When breaker B opens first, breaker A must interrupt the total fault current which occurs when line 5 is open. The fault current can be calculated after modifying the bus impedance matrix to open line 5. To simulate the opening of line 5 a fictitious link, whose impedance is equal to the negative of the impedance of element 5, is added between buses 4 and 3. From Table 6.4, the impedance of this fictitious link in terms of the sequence quantities will be

$$z^{0,1,2}_{43,43(2)} = \begin{bmatrix} -1.5 & & \\ & -0.60 & \\ & & -0.60 \end{bmatrix}$$

The elements of the lth row and column are

$$Z_{l2} = Z_{2l} = Z_{42} - Z_{32}$$
$$Z_{l3} = Z_{3l} = Z_{43} - Z_{33}$$
$$Z_{l4} = Z_{4l} = Z_{44} - Z_{34}$$
$$Z_{ll} = Z_{4l} - Z_{3l} + z_{43,43(2)}$$

and the augmented positive sequence matrix is

	②	③	④	l
②	0.0876	0.0149	0.0586	0.0437
③	0.0149	0.0876	0.0439	−0.0437
④	0.0586	0.0439	0.2928	0.2489
l	0.0437	−0.0437	0.2489	−0.3074

The element Z'_{44} of the mo

$$Z'_{44} = Z_{44} - Z_{41}Z_{ll}^{-1}Z_{l4}$$

This new value is

$$Z^{(1)}_{44} = 0.4943$$

Then, the total fault curre

$$I^{0,1,2}_{4(F)} = \sqrt{3} \begin{bmatrix} 0 \\ \dfrac{1}{Z^{(1)}_{44} + z_F} \\ 0 \end{bmatrix} =$$

$$= \begin{bmatrix} 0 \\ 2.02\sqrt{3} \\ 0 \end{bmatrix}$$

The phase components of

$$I^{a,b,c}_{4(F)} = T_s I^{0,1,2}_{4(F)} = 2.02 \begin{bmatrix} 1 \\ a^2 \\ a \end{bmatrix}$$

which are the maximum cu

6.5 Short circuit co

Short circuit currents and impedance matrix for the 1957). The loop currents

The element Z'_{44} of the modified bus impedance matrix is

$$Z'_{44} = Z_{44} - Z_{41}Z_{11}^{-1}Z_{14}$$

This new value is

$$Z_{44}^{(1)} = 0.4943$$

Then, the total fault current is

$$I_{4(F)}^{0,1,2} = \sqrt{3}\begin{bmatrix} 0 \\ \dfrac{1}{Z_{44}^{(1)} + z_F} \\ 0 \end{bmatrix} = \sqrt{3}\begin{bmatrix} 0 \\ \dfrac{1}{0.494} \\ 0 \end{bmatrix}$$

$$= \begin{bmatrix} 0 \\ 2.02\sqrt{3} \\ 0 \end{bmatrix}$$

The phase components of the total fault current are

$$I_{4(F)}^{a,b,c} = T_s I_{4(F)}^{0,1,2} = 2.02\begin{bmatrix} 1 \\ a^2 \\ a \end{bmatrix}$$

which are the maximum currents to be interrupted.

6.5 Short circuit calculations using Z_{LOOP}

Short circuit currents and voltages can be calculated using the loop impedance matrix for the simplified system given in Fig. 6.2 (Lantz, 1957). The loop currents of the simplified system are zero prior to the

fault since all bus currents and off-nominal tap settings are neglected. It is necessary, therefore, to calculate the loop currents resulting from the fault in order to determine short circuit currents and voltages. The fault calculations can be performed using either three-phase quantities or symmetrical components. The method will be described using three-phase quantities.

The number of three-phase elements in the simplified system is equal to the number of network elements plus the number of machine equivalents. The number of nodes is equal to the number of buses n plus ground, that is $n + 1$. The number of links or basic loops, in the simplified system, is, then

$$l_n = (e + e_g) - (n + 1) + 1$$

or

$$l_n = e + e_g - n$$

where e is the number of three-phase network elements and e_g is the number of three-phase machine equivalents.

A fault at bus p is simulated by adding a link from the bus to ground. Using the representation of the system shown in Fig. 6.3, the voltages during the fault are

$$\bar{E}^{a,b,c}_{BUS(F)} = \bar{E}^{a,b,c}_{BUS(0)} + \overline{\Delta E}^{a,b,c}_{BUS} \tag{6.5.1}$$

where the vector $\overline{\Delta E}^{a,b,c}_{BUS}$ represents changes in bus voltages resulting from the faulted bus source voltage $E^{a,b,c}_{p(0)}$.

The performance equation of a network in the loop frame of reference is

$$\bar{E}^{a,b,c}_{LOOP} = Z^{a,b,c}_{LOOP}\bar{I}^{a,b,c}_{LOOP}$$

For the faulted system, shown in Fig. 6.3, the known loop voltage vector is

$$\bar{E}^{a,b,c}_{LOOP} = \begin{bmatrix} 0 \\ \cdots \\ 0 \\ E^{a,b,c}_{p(0)} \end{bmatrix}$$

The dimension of the loop impedance matrix, which includes the fault loop, is $3(l_n + 1) \times 3(l_n + 1)$. The unknown loop current vector due

to the fault is

$$\bar{I}^{a,b,c}_{LOOP(F)} = \begin{bmatrix} I^{a,b,c}_{A(F)} \\ \cdots \\ I^{a,b,c}_{l_n(F)} \\ I^{a,b,c}_{L(F)} \end{bmatrix}$$

where $I^{a,b,c}_{L(F)}$ is the current
rents can be calculated, th

$$\bar{I}^{a,b,c}_{LOOP(F)} = (Z^{a,b,c}_{LOOP})^{-1}\bar{E}^{a,b,c}_{LOOP}$$

The currents in all ele
lated from

$$\bar{i}^{a,b,c}_{(F)} = C\bar{I}^{a,b,c}_{LOOP(F)}$$

where C is the loop inciden
vector can be partitioned

$$\bar{i}^{a,b,c}_{(F)} = \begin{bmatrix} \bar{i}^{a,b,c}_{b(F)} \\ \bar{i}^{a,b,c}_{l(F)} \end{bmatrix}$$

where $\bar{i}^{a,b,c}_{b(F)}$ = branch curre
$\bar{i}^{a,b,c}_{l(F)}$ = link current
Then the vector of voltage

$$\overline{\Delta E}^{a,b,c}_{BUS} = K^t[z^{a,b,c}_{bb}]\bar{i}^{a,b,c}_{b(F)}$$

where K = branch-path in
$[z^{a,b,c}_{bb}]$ = primitive impe
The bus voltages during t
changes to the voltages pri

$$\bar{E}^{a,b,c}_{BUS(F)} = \bar{E}^{a,b,c}_{BUS(0)} + \overline{\Delta E}^{a,b}$$

The current at the faulted
loop, that is, $I^{a,b,c}_{L(F)}$.

The method described
locations in the system by

at the fault is

$$\bar{I}^{a,b,c}_{LOOP(F)} = \begin{bmatrix} I^{a,b,c}_{1(F)} \\ \hline \cdots \\ \hline I^{a,b,c}_{L_1(F)} \\ \hline I^{a,b,c}_{L(F)} \end{bmatrix}$$

where $I^{a,b,c}_{L(F)}$ is the current associated with the fault loop. The loop currents can be calculated, then, from

$$\bar{I}^{a,b,c}_{LOOP(F)} = (Z^{a,b,c}_{LOOP})^{-1}\bar{E}^{a,b,c}_{LOOP}$$

The currents in all elements of the network during fault can be calculated from

$$\bar{i}^{a,b,c}_{b(F)} = C\bar{I}^{a,b,c}_{LOOP(F)} \tag{6.5.2}$$

where C is the loop incidence matrix on a three-phase basis. The current vector can be partitioned as follows:

$$\bar{i}^{a,b,c}_{b(F)} = \begin{bmatrix} \bar{i}^{a,b,c}_{b(F)} \\ \hline \bar{i}^{a,b,c}_{l(F)} \end{bmatrix}$$

where $\bar{i}^{a,b,c}_{b(F)}$ = branch current vector
$\bar{i}^{a,b,c}_{l(F)}$ = link current vector

Then the vector of voltage changes is

$$\overline{\Delta E}^{a,b,c}_{BUS} = K^t[z^{a,b,c}_{bb}]\bar{i}^{a,b,c}_{b(F)}$$

where K = branch-path incidence matrix on a three-phase basis
$[z^{a,b,c}_{bb}]$ = primitive impedance matrix for branches

The bus voltages during the fault are obtained by adding the voltage changes to the voltages prior to the fault. Equation (6.5.1) becomes

$$\bar{E}^{a,b,c}_{BUS(F)} = \bar{E}^{a,b,c}_{BUS(0)} + K^t[z^{a,b,c}_{bb}]\bar{i}^{a,b,c}_{b(F)} \tag{6.5.3}$$

The current at the faulted bus is the same as the current in the auxiliary loop, that is, $I^{a,b,c}_{L(F)}$.

The method described can be employed to calculate faults at various locations in the system by adding links, one at a time, between the

faulted bus and ground. This requires the formation and inversion of a loop impedance matrix for each different fault location. The necessary matrix operations required to provide short circuit data for a large number of locations, therefore, would be time-consuming.

An alternate method, in which links are added simultaneously between each bus and ground, requires the formation of a single loop impedance matrix and only one inversion of a submatrix (Byerly, Long, Baldwin, and King, 1958). In this method, the currents in the auxiliary loops are changed to simulate different fault locations. Phase currents are assumed for the auxiliary loop associated with a faulted bus p depending on the type of fault. Assuming one per unit phase current, the pth auxiliary loop current is

For a three-phase fault:

$$I^{a,b,c}_{Lp(F)} = \begin{bmatrix} 1 \\ a^2 \\ a \end{bmatrix}$$

For a line-to-ground fault on phase a:

$$I^{a,b,c}_{Lp(F)} = \begin{bmatrix} 1 \\ 0 \\ 0 \end{bmatrix}$$

For a line-to-line fault between phases b and c:

$$I^{a,b,c}_{Lp(F)} = \begin{bmatrix} 0 \\ 1 \\ -1 \end{bmatrix}$$

The currents in all other auxiliary loops are assumed to be zero.

The loop voltage and current vectors and the loop impedance matrix in the performance equation for the entire network, including auxiliary

loops can be partitioned a

$$\begin{bmatrix} E^{a,b,c}_L \\ E^{a,b,c}_{L(F)} \end{bmatrix} = \begin{bmatrix} Z^{a,b,c}_L & Z^{a,b,c}_M \\ (Z^{a,b,c}_M)^t & Z^{a,b,c}_A \end{bmatrix}$$

In equation (6.5.4), the ve simplified system and $\bar{E}^{a,b,c}_{L(F)}$

The vector $\bar{I}^{a,b,c}_L$ can be (6.5.4) by assuming the au

$$\bar{I}^{a,b,c}_{L(F)} = \begin{bmatrix} 0 \\ \cdots \\ 0 \\ I^{a,b,c}_{Lp(F)} \\ 0 \\ \cdots \\ 0 \end{bmatrix}$$

where $I^{a,b,c}_{Lp(F)}$ is the assumed loop. From equation (6.5.

$$Z^{a,b,c}_L \bar{I}^{a,b,c}_L + Z^{a,b,c}_M \bar{I}^{a,b,c}_{L(F)} = \bar{E}$$

Since $\bar{E}^{a,b,c}_L = 0$, equation (

$$Z^{a,b,c}_L \bar{I}^{a,b,c}_L + Z^{a,b,c}_M \bar{I}^{a,b,c}_{L(F)} = 0$$

Solving for the loop current

$$\bar{I}^{a,b,c}_L = -(Z^{a,b,c}_L)^{-1} Z^{a,b,c}_M \bar{I}^{a,b,c}_{L(F)}$$

loops, can be partitioned as follows:

$$\begin{bmatrix} E_L^{a,b,c} \\ \hline E_{L(F)}^{a,b,c} \end{bmatrix} = \begin{bmatrix} Z_L^{a,b,c} & Z_M^{a,b,c} \\ \hline (Z_M^{a,b,c})^t & Z_A^{a,b,c} \end{bmatrix} \begin{bmatrix} I_L^{a,b,c} \\ \hline I_{L(F)}^{a,b,c} \end{bmatrix} \tag{6.5.4}$$

In equation (6.5.4), the vectors $\bar{E}_L^{a,b,c}$ and $\bar{I}_L^{a,b,c}$ refer to the loops in the simplified system and $\bar{E}_{L(F)}^{a,b,c}$ and $\bar{I}_{L(F)}^{a,b,c}$ refer to the auxiliary loops.

The vector $\bar{I}_L^{a,b,c}$ can be calculated for a fault at bus p from equation (6.5.4) by assuming the auxiliary loop currents to be

$$\bar{I}_{L(F)}^{a,b,c} = \begin{bmatrix} 0 \\ \hline \cdots \\ \hline 0 \\ \hline I_{Lp(F)}^{a,b,c} \\ \hline 0 \\ \hline \cdots \\ \hline 0 \end{bmatrix} \tag{6.5.5}$$

where $\bar{I}_{Lp(F)}^{a,b,c}$ is the assumed three-phase current vector of the pth auxiliary loop. From equation (6.5.4) it follows that

$$Z_L^{a,b,c}\bar{I}_L^{a,b,c} + Z_M^{a,b,c}\bar{I}_{L(F)}^{a,b,c} = \bar{E}_L^{a,b,c} \tag{6.5.6}$$

Since $\bar{E}_L^{a,b,c} = 0$, equation (6.5.6) becomes

$$Z_L^{a,b,c}\bar{I}_L^{a,b,c} + Z_M^{a,b,c}\bar{I}_{L(F)}^{a,b,c} = 0$$

Solving for the loop currents of the simplified system,

$$\bar{I}_L^{a,b,c} = -(Z_L^{a,b,c})^{-1}Z_M^{a,b,c}\bar{I}_{L(F)}^{a,b,c} \tag{6.5.7}$$

The auxiliary loop voltages, from equation (6.5.4), are

$$\bar{E}^{a,b,c}_{L(F)} = (Z^{a,b,c}_M)^t \bar{I}^{a,b,c}_L + Z^{a,b,c}_A \bar{I}^{a,b,c}_{L(F)}$$

Substituting from equation (6.5.7) for $\bar{I}^{a,b,c}_L$, then

$$\bar{E}^{a,b,c}_{L(F)} = \{Z^{a,b,c}_A - (Z^{a,b,c}_M)^t (Z^{a,b,c}_L)^{-1} Z^{a,b,c}_M\} \bar{I}^{a,b,c}_{L(F)} \tag{6.5.8}$$

Equation (6.5.8) determines the auxiliary loop source voltages for the assumed auxiliary loop currents given by equation (6.5.5).

To determine actual fault current the voltage source in the pth auxiliary loop must equal $E^{a,b,c}_{p(0)}$, the pth bus voltage prior to the fault. The calculated source voltage of the pth auxiliary loop $E^{a,b,c}_{Lp(F)}$ is obtained from equation (6.5.8) using the assumed currents. The actual fault current at bus p is

For phase a:

$$I^a_{Lp(F)}(\text{actual}) = I^a_{Lp(F)}\ (\text{assumed})\ \frac{E^a_{p(0)}}{E^a_{Lp(F)}}$$

For phase b:

$$I^b_{Lp(F)}(\text{actual}) = I^b_{Lp(F)}\ (\text{assumed})\ \frac{E^b_{p(0)}}{E^b_{Lp(F)}}$$

and so forth.

The loop currents $\bar{I}^{a,b,c}_L$ of the simplified system can be obtained from equation (6.5.7) using the actual auxiliary loop currents. The branch currents can be calculated from equation (6.5.2) and the bus voltages, then, can be determined from equation (6.5.3).

In equation (6.5.8), the assumed auxiliary loop currents $\bar{I}^{a,b,c}_{L(F)}$ are flowing in the auxiliary links connecting network buses and ground and therefore are bus currents. The auxiliary loop voltages $\bar{E}^{a,b,c}_{L(F)}$ are the bus voltages resulting from the assumed currents. In equation (6.5.8), then,

$$Z^{a,b,c}_A - (Z^{a,b,c}_M)^t (Z^{a,b,c}_L)^{-1} Z^{a,b,c}_M = Z^{a,b,c}_{BUS}$$

In this method, therefore, the loop impedance matrix is used to determine the bus impedance matrix for the calculation of short circuits.

6.6 Example of short circuit calculations using Z_{LOOP}

Using the loop frame of reference, the method of calculating short circuit currents and voltages will be illustrated for a fault at bus 4 in the sample system shown in Fig. 6.4*a*.

Problem

Using symmetrical compo
fault at bus 4:

i. Total fault curr
ii. Short circuit cu
iii. Bus voltages du

Solution

The positive sequence loo
the link representing the f
phase fault conditions. T
oriented connected graph
including the fault link are

(*a*)

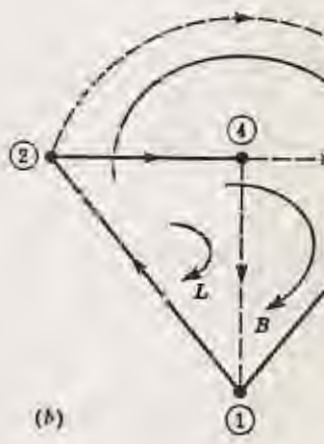

(*b*)

Problem

Using symmetrical components, calculate the following for a three-phase fault at bus 4:

i. Total fault current
ii. Short circuit currents in all the lines of the network
iii. Bus voltages during the fault

Solution

The positive sequence loop impedance matrix for the system including the link representing the fault must be determined to calculate the three-phase fault conditions. The basic loops prior to fault are shown in the oriented connected graph in Fig. 6.5*a*. The basic loops of the graph including the fault link are shown in Fig. 6.5*b*. The basic loop incidence

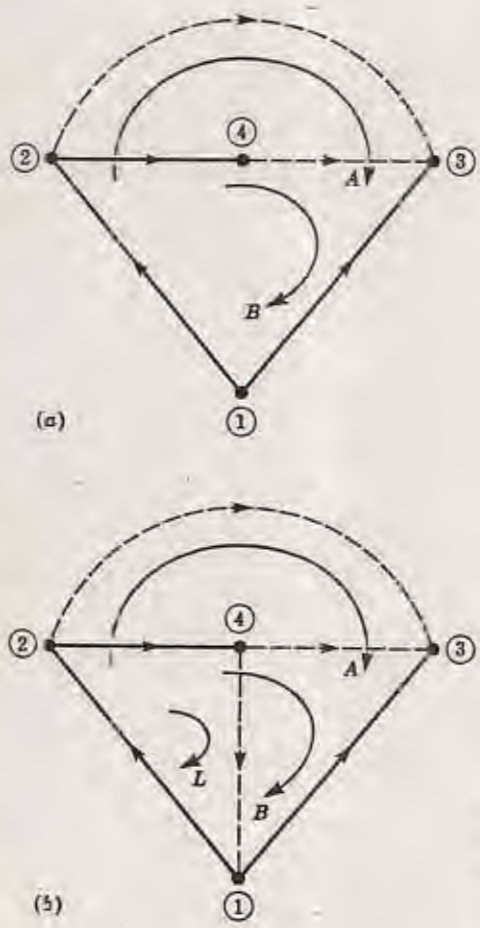

Fig. 6.5 Basic loops of oriented connected graph for sample power system. (a) Prior to fault; (b) during fault condition.

matrix for the fault condition is

$$C = \begin{array}{c|ccc} e \backslash l & A & B & L \\ \hline 1\text{–}2 & 1 & 1 & 1 \\ 1\text{–}3 & -1 & -1 & \\ 2\text{–}4 & & 1 & 1 \\ 2\text{–}3 & 1 & & \\ 4\text{–}3 & & 1 & \\ 4\text{–}1 & & & 1 \end{array}$$

Using the sequence impedances given in Table 6.4 and letting the impedance of the fault link be zero, the positive sequence primitive impedance matrix is

$$[z^{(1)}] = \begin{array}{c|cccccc} e \backslash g & 1\text{–}2 & 1\text{–}3 & 2\text{–}4 & 2\text{–}3 & 4\text{–}3 & 4\text{–}1 \\ \hline 1\text{–}2 & 0.1025 & & & & & \\ 1\text{–}3 & & 0.1025 & & & & \\ 2\text{–}4 & & & 0.4000 & & & \\ 2\text{–}3 & & & & 1.0000 & & \\ 4\text{–}3 & & & & & 0.6000 & \\ 4\text{–}1 & & & & & & 0 \end{array}$$

The positive sequence loop impedance matrix is

$$Z^{(1)}_{LOOP} = C^t[z^{(1)}]C = \begin{array}{c|ccc} & A & B & L \\ \hline A & 1.2050 & 0.2050 & 0.1025 \\ B & 0.2050 & 1.2050 & 0.5025 \\ L & 0.1025 & 0.5025 & 0.5025 \end{array}$$

Assuming the line-to-ground
unit, the voltage source in t

$$E^{a,b,c}_{4(0)} = \begin{bmatrix} 1 \\ a^2 \\ a \end{bmatrix}$$

and the sequence voltages ar

$$E^{0,1,2}_{4(0)} = (T^*_s)^t E^{a,b,c}_{4(0)} = \begin{bmatrix} 0 \\ \sqrt{3} \\ 0 \end{bmatrix}$$

The pos.ive sequence loop cu

$$\bar{I}^{(1)}_{LOOP} = (Z^{(1)}_{LOOP})^{-1}\bar{E}^{(1)}_{LOOP}$$

$$\begin{bmatrix} I^{(1)}_A \\ I^{(1)}_B \\ I^{(1)}_{L(P)} \end{bmatrix} = \begin{bmatrix} 0.855 & -0.1 \\ -0.125 & 1.4 \\ -0.050 & -1.4 \end{bmatrix}$$

where $I^{(1)}_{L(P)}$ is the positive se
loop and equals the total posit
currents are

$$I^{0,1,2}_{L(P)} = \begin{bmatrix} 0 \\ 3.42\sqrt{3} \\ 0 \end{bmatrix}$$

Assuming the line-to-ground voltages prior to the fault are equal to one per unit, the voltage source in the loop associated with the faulted bus is

$$E_{4(0)}^{a,b,c} = \begin{bmatrix} 1 \\ a^2 \\ a \end{bmatrix}$$

and the sequence voltages are

$$E_{4(0)}^{0,1,2} = (T_s^*)^t E_{4(0)}^{a,b,c} = \begin{bmatrix} 0 \\ \sqrt{3} \\ 0 \end{bmatrix}$$

The positive sequence loop currents are

$$\bar{I}_{LOOP}^{(1)} = (Z_{LOOP}^{(1)})^{-1} \bar{E}_{LOOP}^{(1)}$$

$$\begin{bmatrix} I_A^{(1)} \\ I_B^{(1)} \\ I_{L(F)}^{(1)} \end{bmatrix} = \begin{bmatrix} 0.855 & -0.125 & -0.050 \\ -0.125 & 1.442 & -1.416 \\ -0.050 & -1.416 & 3.416 \end{bmatrix} \begin{bmatrix} 0 \\ 0 \\ \sqrt{3} \end{bmatrix} = \begin{bmatrix} -0.05\sqrt{3} \\ -1.42\sqrt{3} \\ 3.42\sqrt{3} \end{bmatrix}$$

where $I_{L(F)}^{(1)}$ is the positive sequence current associated with the fault loop and equals the total positive sequence fault current. The sequence currents are

$$I_{L(F)}^{0,1,2} = \begin{bmatrix} 0 \\ 3.42\sqrt{3} \\ 0 \end{bmatrix}$$

Then, the phase components of the fault current are

$$I^{a,b,c}_{L(F)} = T_s I^{0,1,2}_{L(F)} = 3.42 \begin{bmatrix} 1 \\ a^2 \\ a \end{bmatrix}$$

The positive sequence currents in the elements of the network are

$$\bar{i}^{(1)} = C\bar{I}^{(1)}_{LOOP}$$

$$\begin{bmatrix} i^{(1)}_{12} \\ i^{(1)}_{13} \\ i^{(1)}_{24} \\ i^{(1)}_{23} \\ i^{(1)}_{43} \\ i^{(1)}_{41} \end{bmatrix} = \begin{array}{c} \\ 1\text{–}2 \\ 1\text{–}3 \\ 2\text{–}4 \\ 2\text{–}3 \\ 4\text{–}3 \\ 4\text{–}1 \end{array} \begin{array}{c} \begin{array}{ccc} A & B & L \end{array} \\ \begin{bmatrix} 1 & 1 & 1 \\ -1 & -1 & \\ & 1 & 1 \\ 1 & & \\ & 1 & \\ & & 1 \end{bmatrix} \end{array} \begin{bmatrix} -0.05\sqrt{3} \\ -1.42\sqrt{3} \\ 3.42\sqrt{3} \end{bmatrix} = \begin{bmatrix} 1.95\sqrt{3} \\ 1.47\sqrt{3} \\ 2.00\sqrt{3} \\ -0.05\sqrt{3} \\ -1.42\sqrt{3} \\ 3.42\sqrt{3} \end{bmatrix}$$

Then, the sequence and phase components are

$$i^{0,1,2}_{12} = \begin{bmatrix} 0 \\ 1.95\sqrt{3} \\ 0 \end{bmatrix} \qquad i^{a,b,c}_{12} = T_s i^{0,1,2}_{12} = 1.95 \begin{bmatrix} 1 \\ a^2 \\ a \end{bmatrix}$$

$$i^{0,1,2}_{13} = \begin{bmatrix} 0 \\ 1.47\sqrt{3} \\ 0 \end{bmatrix} \qquad i^{a,b,c}_{13} = T_s i^{0,1,2}_{13} = 1.47 \begin{bmatrix} 1 \\ a^2 \\ a \end{bmatrix}$$

$$i^{0,1,2}_{24} = \begin{bmatrix} 0 \\ 2.00\sqrt{3} \\ 0 \end{bmatrix}$$

$$i^{0,1,2}_{23} = \begin{bmatrix} 0 \\ -0.05\sqrt{3} \\ 0 \end{bmatrix}$$

$$i^{0,1,2}_{43} = \begin{bmatrix} 0 \\ -1.42\sqrt{3} \\ 0 \end{bmatrix}$$

The branch-path incidence

$$K = \begin{array}{c|cc} b \backslash \text{path} & ② & ③ \\ \hline 1\text{–}2 & -1 & \\ 1\text{–}3 & & -1 \\ 2\text{–}4 & & \end{array}$$

$$i_{24}^{0,1,2} = \begin{bmatrix} 0 \\ 2.00\sqrt{3} \\ 0 \end{bmatrix} \qquad i_{24}^{a,b,c} = T_s i_{24}^{0,1,2} = 2.00 \begin{bmatrix} 1 \\ a^2 \\ a \end{bmatrix}$$

$$i_{23}^{0,1,2} = \begin{bmatrix} 0 \\ -0.05\sqrt{3} \\ 0 \end{bmatrix} \qquad i_{23}^{a,b,c} = T_s i_{23}^{0,1,2} = -0.05 \begin{bmatrix} 1 \\ a^2 \\ a \end{bmatrix}$$

$$i_{43}^{0,1,2} = \begin{bmatrix} 0 \\ -1.42\sqrt{3} \\ 0 \end{bmatrix} \qquad i_{43}^{a,b,c} = T_s i_{43}^{0,1,2} = -1.42 \begin{bmatrix} 1 \\ a^2 \\ a \end{bmatrix}$$

The branch-path incidence matrix is

$$K = \begin{array}{c|ccc} b \backslash \text{path} & ② & ③ & ④ \\ \hline 1\text{–}2 & -1 & & -1 \\ 1\text{–}3 & & -1 & \\ 2\text{–}4 & & & -1 \end{array}$$

The positive sequence bus voltages due to the fault are

$$\overline{\Delta E}^{(1)}_{BUS} = K'[z^{(1)}_{ab}]\,i^{(1)}_a$$

$$\begin{bmatrix} \Delta E_2 \\ \Delta E_3 \\ \Delta E_4 \end{bmatrix} = \begin{array}{c|cccc} \text{path} \backslash b & 1\text{–}2 & 1\text{–}3 & 2\text{–}4 \\ \hline ② & -1 & & \\ ③ & & -1 & \\ ④ & -1 & & -1 \end{array} \begin{array}{c} 1\text{–}2 \\ 1\text{–}3 \\ 2\text{–}4 \end{array} \begin{bmatrix} 0.1025 & & \\ & 0.1025 & \\ & & 0.4000 \end{bmatrix} \begin{bmatrix} 1.95\sqrt{3} \\ 1.47\sqrt{3} \\ 2.00\sqrt{3} \end{bmatrix} = \begin{bmatrix} -0.20\sqrt{3} \\ -0.15\sqrt{3} \\ -1.00\sqrt{3} \end{bmatrix}$$

Since the positive sequenc

$E^{(1)}_{2(0)} = E^{(1)}_{3(0)} = E^{(1)}_{4(0)} = \sqrt{}$

the positive sequence bus

$\bar{E}^{(1)}_{BUS(F)} = \bar{E}^{(1)}_{BUS(0)} + \overline{\Delta E}^{(1)}_{BU}$

$$\begin{bmatrix} E^{(1)}_{2(F)} \\ E^{(1)}_{3(F)} \\ E^{(1)}_{4(F)} \end{bmatrix} = \sqrt{3}\begin{bmatrix} 1 \\ 1 \\ 1 \end{bmatrix} - \sqrt{3}$$

Then, the sequence and p

fault are

$$E^{0,1,2}_{2(F)} = \begin{bmatrix} 0 \\ 0.80\sqrt{3} \\ 0 \end{bmatrix} \qquad E^{a,}_{2(}$$

$$E^{0,1,2}_{3(F)} = \begin{bmatrix} 0 \\ 0.85\sqrt{3} \\ 0 \end{bmatrix} \qquad E^{a,}_{3(}$$

$$E^{0,1,2}_{4(F)} = \bar{E}^{a,b,c}_{4(F)} = \begin{bmatrix} 0 \\ 0 \\ 0 \end{bmatrix}$$

Using the alternative metho

matrix is partitioned as follo

$$Z^{0,1,2}_{LOOP} = \begin{bmatrix} Z^{0,1,2}_{L} & Z^{0,1,2}_{\Delta} \\ (Z^{0,1,2}_{M})' & Z^{0,1,2}_{\Delta} \end{bmatrix}$$

Since the positive sequence bus voltages prior to the fault are

$$E^{(1)}_{2(0)} = E^{(1)}_{3(0)} = E^{(1)}_{4(0)} = \sqrt{3}$$

the positive sequence bus voltages during the fault are

$$\bar{E}^{(1)}_{BUS(F)} = \bar{E}^{(1)}_{BUS(0)} + \overline{\Delta E}^{(1)}_{BUS}$$

$$\begin{bmatrix} E^{(1)}_{2(F)} \\ E^{(1)}_{3(F)} \\ E^{(1)}_{4(F)} \end{bmatrix} = \sqrt{3}\begin{bmatrix} 1 \\ 1 \\ 1 \end{bmatrix} + \sqrt{3}\begin{bmatrix} -0.20 \\ -0.15 \\ -1.00 \end{bmatrix} = \begin{bmatrix} 0.80\sqrt{3} \\ 0.85\sqrt{3} \\ 0 \end{bmatrix}$$

Then, the sequence and phase components of bus voltages during the fault are

$$E^{0,1,2}_{2(F)} = \begin{bmatrix} 0 \\ 0.80\sqrt{3} \\ 0 \end{bmatrix} \qquad E^{a,b,c}_{2(F)} = T_s E^{0,1,2}_{2(F)} = 0.80\begin{bmatrix} 1 \\ a^2 \\ a \end{bmatrix}$$

$$E^{0,1,2}_{3(F)} = \begin{bmatrix} 0 \\ 0.85\sqrt{3} \\ 0 \end{bmatrix} \qquad E^{a,b,c}_{3(F)} = T_s E^{0,1,2}_{3(F)} = 0.85\begin{bmatrix} 1 \\ a^2 \\ a \end{bmatrix}$$

$$E^{0,1,2}_{4(F)} = E^{a,b,c}_{4(F)} = \begin{bmatrix} 0 \\ 0 \\ 0 \end{bmatrix}$$

Using the alternative method described in Sec. 6.5, the loop impedance matrix is partitioned as follows:

$$Z^{0,1,2}_{LOOP} = \begin{bmatrix} Z^{0,1,2}_{L} & Z^{0,1,2}_{M} \\ (Z^{0,1,2}_{M})^t & Z^{0,1,2}_{A} \end{bmatrix}$$

For the sample system, then,

$$Z^{(1)}_{LOOP} = \begin{array}{c|ccc} & A & B & L \\ \hline A & 1.2050 & 0.2050 & 0.1025 \\ B & 0.2050 & 1.2050 & 0.5025 \\ L & 0.1025 & 0.5025 & 0.5025 \end{array}$$

Assuming the fault current equal to one per unit,

$$I^{a,b,c}_{L4(F)} = \begin{bmatrix} 1 \\ a^2 \\ a \end{bmatrix} \quad \text{and} \quad I^{0,1,2}_{L4(F)} = (T^{-1}_s)^t I^{a,b,c}_{L4(F)} = \begin{bmatrix} 0 \\ \sqrt{3} \\ 0 \end{bmatrix}$$

The positive sequence voltage of the fault loop with the assumed value of fault current is

$$E^{(1)}_{L(F)} = \{Z^{(1)}_A - (Z^{(1)}_M)^t (Z^{(1)}_L)^{-1} Z^{(1)}_M\} I^{(1)}_{L(F)}$$

$$= \left(0.5025 - \begin{bmatrix} 0.1025 & 0.5025 \end{bmatrix} \begin{bmatrix} 0.855 & -0.145 \\ -0.145 & 0.855 \end{bmatrix} \begin{bmatrix} 0.1025 \\ 0.5025 \end{bmatrix} \right) \sqrt{3}$$

$$= 0.293\sqrt{3}$$

The actual positive sequence fault current is

$$I^{(1)}_{L4(F)\,(\text{actual})} = I^{(1)}_{L4(F)\,(\text{assumed})} \frac{E^{(1)}_{4(0)}}{E^{(1)}_{L4(F)}}$$

$$= \sqrt{3}\left(\frac{\sqrt{3}}{0.293\sqrt{3}}\right) = 3.42\sqrt{3}$$

Then, the sequence and phase components of the fault current are

$$I^{0,1,2}_{L4(F)} = \sqrt{3}\begin{bmatrix} 0 \\ 3.42 \\ 0 \end{bmatrix} \qquad I^{a,b,c}_{L4(F)} = T_s I^{0,1,2}_{L4(F)} = 3.42\begin{bmatrix} 1 \\ a^2 \\ a \end{bmatrix}$$

The positive sequence loop curr

$$I^{(1)}_L = -(Z^{(1)}_L)^{-1} Z^{(1)}_M I^{(1)}_{L(F)}$$

$$\begin{bmatrix} I^{(1)}_A \\ I^{(1)}_B \end{bmatrix} = - \begin{bmatrix} 0.855 & -0.145 \\ -0.145 & 0.855 \end{bmatrix}$$

Using the loop currents, the cu
can be calculated as previously

6.7 Description of shor

The majority of short circuit stu
phase and line-to-ground faults
Circuit Program, which is desi
positive and zero sequence bus
6.3 and the simplified system re

The input data describing
and substation names. Data
and terminal points includes th
tive and zero sequence reactan
names, one for each terminal, a
of two lines which are mutually
terminal and a mutual reactanc
names for each terminal, the nu
and the positive and zero seq
include also a study name, case

The program first assigns se
the network data to facilitate
sequence bus impedance matr
checks are performed. Next, th
is formed. This matrix is ter
device to provide space in mem
the zero sequence bus impeda
sequence bus impedance matri
tions. Since these matrices are
and upper off-diagonal elemen
sequence of steps in the short c

Short circuits in megavolt
bus and tabulated with the ap
results are obtained:

The positive sequence loop currents are

$$\bar{I}_L^{(1)} = -(Z_L^{(1)})^{-1} Z_M^{(1)} I_{L(F)}^{(1)}$$

$$\begin{bmatrix} I_A^{(1)} \\ I_B^{(1)} \end{bmatrix} = - \begin{bmatrix} 0.855 & -0.145 \\ -0.145 & 0.855 \end{bmatrix} \begin{bmatrix} 0.1025 \\ 0.5025 \end{bmatrix} 3.42\sqrt{3} = \sqrt{3} \begin{bmatrix} -0.65 \\ -1.42 \end{bmatrix}$$

Using the loop currents, the currents in the elements and bus voltages can be calculated as previously shown.

6.7 Description of short circuit program

The majority of short circuit studies involve only the calculation of three-phase and line-to-ground faults. The American Electric Power Short Circuit Program, which is designed to calculate these faults, uses the positive and zero sequence bus impedance matrices as described in Sec. 6.3 and the simplified system representation presented in Sec. 6.2.

The input data describing the system is specified using power plant and substation names. Data for generators, synchronous condensers, and terminal points includes the station names and corresponding positive and zero sequence reactances. Lines are specified by two station names, one for each terminal, along with the line reactances. Each set of two lines which are mutually coupled requires a station name for each terminal and a mutual reactance. Transformers are specified by station names for each terminal, the number of windings and their connections, and the positive and zero sequence reactances. The input data may include also a study name, case number, and identifying remarks.

The program first assigns sequential bus numbers and then rearranges the network data to facilitate the formation of the positive and zero sequence bus impedance matrices. During this phase extensive data checks are performed. Next, the positive sequence bus impedance matrix is formed. This matrix is temporarily stored on an auxiliary storage device to provide space in memory for the next program segment. Then the zero sequence bus impedance matrix is formed and the positive sequence bus impedance matrix is retrieved for use in the fault calculations. Since these matrices are symmetrical only the diagonal elements and upper off-diagonal elements need to be formed and stored. The sequence of steps in the short circuit program is shown in Fig. 6.6.

Short circuits in megavolt-amperes (mva) are calculated for each bus and tabulated with the appropriate station name. The following results are obtained:

1. Total three-phase and line-to-ground bus fault currents
2. Three-phase and line-to-ground fault contributions in each line connected to the faulted bus
3. Zero sequence driving point reactance for the faulted bus
4. Total three-phase and line-to-ground bus fault currents and cor-

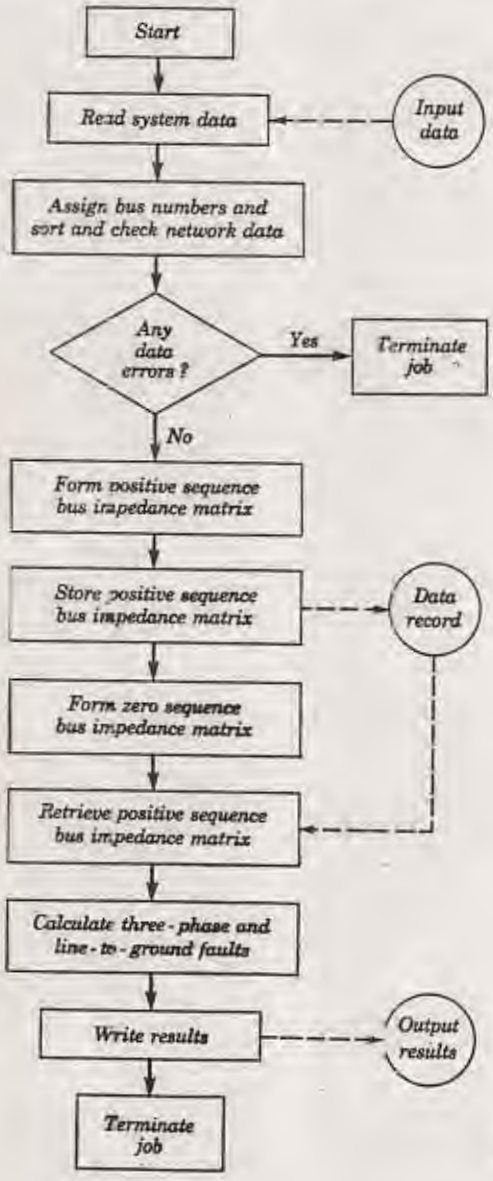

Fig. 6.6 Simplified flow chart for the American Electric Power Short Circuit Program.

AMERICAN ELECTRIC POWER -- SHORT CIRCUIT CALCULATION
INDIANA AND MICHIGAN TRANSMISSION PLANNING CASE 50 1978 SYSTEM

BUS INDEX

BUS		PAGE	BUS		PAGE	BUS		PAGE	BUS		PAGE
ADAMS		48	ADAMS	69	19	AEC		1	AEC	138	18
ALBION		40	ALBION	69	19	BLUFF POINT		47	BLUFF PT	34	19
BREED		16	BUCHANAN	11	19	BUCHANAN	34	26	BUCHANAN	69	26
CAYUGA TAP		18	CENTERVLE TP		47	CENTVLE	69	19	CLIFTY CREEK		4
COLFAX		27	COLLEGE CRNR		21	COLUMBIA		34	COLUMBIA	34	18
COLUMBIA	69	19	CONCORD		34	CONCORD	34	28	CONCORD	69	19
CORLY		39	CRYSTAL		38	CRYSTAL	69	19	DALEVILLE		46
DALEVILLE	34	19	DARDEN RD		39	DEER CR	11	18	DEER CR	34	34
DEER CR.	69	20	DEER CREEK		37	DELAWARE		43	DELAWARE	11	18
DELAWARE	34	24	DELAWARE	69	20	DEQUINE		31	DESOTO	69	19
DESOTO	138	44	DESOTO	345	42	DRAGOON		28	E.LIMA	345	1
ELKHART	34	28	GASTON		43	GASTON	34	19	GOODINGS GR		31

AMERICAN ELECTRIC POWER -- SHORT CIRCUIT CALCULATION
INDIANA AND MICHIGAN TRANSMISSION PLANNING CASE 50 1975 SYSTEM PAGE 48

BUS FAULT AT	TOTAL BUS FAULT - MVA 3-PHASE	L TO G	XO	LINE CONTRIBUTIONS - MVA LINE TO	3-PHASE	L TO G
PENNYSILLE						
NORMAL	1852.9	1245.9	.1202	PENNYSILL EQ	.0	28.4
				ADAMS	452.2	347.2
				JAY	1200.7	868.1
WITH THE FOLLOWING LINES OUT						
LINE TO ADAMS	1223.7	901.3	.1695	PENNYSILL EQ	.0	29.1
				JAY	1223.7	872.2
LINE TO JAY	474.8	397.1	.3364	PENNYSILL EQ	.0	25.4
				ADAMS	474.8	371.7
ADAMS						
NORMAL	1338.9	1029.5	.1420	PENNYSILLE	715.4	512.7
				ADAMS 69	1.0	85.9
				LINCOLN	618.5	430.9
WITH THE FOLLOWING LINES OUT						
LINE TO PENNYSILLE	837.8	737.5	.2669	ADAMS 69	1.0	77.7
				LINCOLN	836.7	660.2
LINE TO ADAMS 69	1326.0	986.1	.1891	PENNYSILLE	715.4	482.6
				LINCOLN	610.5	403.5
LINE TO LINCOLN	735.8	620.9	.2124	PENNYSILLE	737.5	543.2
				ADAMS 69	1.0	77.6

Fig. 6.7 Sample output of the American Electric Power Short Circuit Program.

responding line contributions when lines connected to the faulted bus are opened one at a time

In order to locate quickly the short circuit results for individual stations, the printed output includes a title page with an index of stations listed alphabetically and their corresponding page numbers. A sample of this output is shown in Fig. 6.7.

In addition to these results which are obtained automatically for each bus, the following results can be obtained by special options:

1. Fault contributions in lines not connected directly to the faulted bus
2. Bus voltages during fault
3. Fault contributions following the switching of lines not connected to the faulted bus
4. Fault contributions following the switching of two or more lines connected to the faulted bus

Problems

6.1 The reactance data for the three-phase system shown in Fig. 6.8 is
Generator:

$$x^{(1)} = x^{(2)} = 0.1$$
$$x^{(3)} = 0.04$$
$$x_g = 0.02$$

Transformer:

$$x^{(1)} = x^{(2)} = x^{(0)} = 0.1$$
$$x_g = 0.05$$

Form the positive and zero sequence bus impedance matrices and

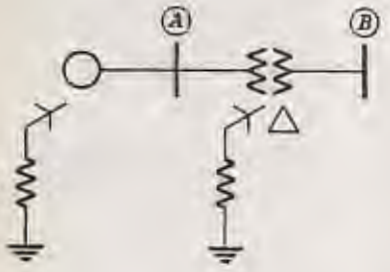

Fig. 6.8 Sample system for Prob. 6.1.

calculate the total fa
generator and transfor
a. Three-phase-to-gro
b. Line-to-ground

6.2 For a fault at bus p
neutral be y_a, y_b, and
and ground be y_g.
a. Form the fault adm
b. Verify that each fau
is a special case for

6.3 Derive the equations fo
cal components and p
bus p:
a. Three-phase (not g
b. Line-to-line
c. Line-to-line-to-grou

6.4 From the equations fo
works and their connec
a. Three-phase
b. Line-to-ground
c. Line-to-line
d. Line-to-line-to-grou

6.5 Using the sample systen
current and bus voltage
a. Three-phase-to-grou
b. Line-to-ground
c. Line-to-line-to-grou

6.6 Using the same sample s
transmission line B–C is

$$x^{a,b,c} = \begin{bmatrix} 0.3 & 0.1 & 0. \\ 0.1 & 0.3 & 0. \\ 0.1 & 0.1 & 0. \end{bmatrix}$$

compute the total fault
faults at bus B:
a. Three-phase-to-grou
b. Line-to-ground
c. Line-to-line-to-grou
Compare these results w

calculate the total fault current and the contributions from the generator and transformer for the following faults at bus A:

a. Three-phase-to-ground

b. Line-to-ground

6.2 For a fault at bus p let the admittance between each phase and neutral be y_a, y_b, and y_c, and let the admittance between neutral and ground be y_g.

a. Form the fault admittance matrix $Y_p^{a,b,c}$.

b. Verify that each fault admittance matrix $Y_p^{a,b,c}$ given in Table 6.1 is a special case for the condition that $y_a = y_b = y_c$.

6.3 Derive the equations for the total fault current in terms of symmetrical components and phase quantities for the following faults at bus p:

a. Three-phase (not grounded)

b. Line-to-line

c. Line-to-line-to-ground

6.4 From the equations for the fault currents draw the sequence networks and their connections to simulate the following faults:

a Three-phase

b Line-to-ground

c Line-to-line

d. Line-to-line-to-ground

6.5 Using the sample system given in Prob. 5.3, compute the total fault current and bus voltages for the following faults at bus B:

a. Three-phase-to-ground

b. Line-to-ground

c. Line-to-line-to-ground

6.6 Using the same sample system given in Prob. 5.3, and assuming the transmission line B–C is balanced and its reactance is

$$x^{a,b,c} = \begin{bmatrix} 0.3 & 0.1 & 0.1 \\ 0.1 & 0.3 & 0.1 \\ 0.1 & 0.1 & 0.3 \end{bmatrix}$$

compute the total fault current and bus voltages for the following faults at bus B:

a. Three-phase-to-ground

b. Line-to-ground

c. Line-to-line-to-ground

Compare these results with those obtained from Prob. 6.5.

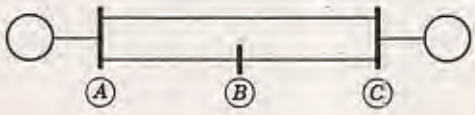

Fig. 6.9 Sample two-phase system for Prob. 5.7.

6.7 The reactance data for the two-phase system shown in Fig. 6.9 is
Generators A and C:

$$x_{0A} = x_{0C} = \begin{bmatrix} 5 & 0 \\ 0 & 5 \end{bmatrix}$$

Transmission lines A–B and B–C:

$$x_{AB} = x_{BC} = \begin{bmatrix} 4 & \sqrt{2} \\ \sqrt{2} & 3 \end{bmatrix}$$

Transmission line A–C:

$$x_{AC} = \begin{bmatrix} 8 & 2\sqrt{2} \\ 2\sqrt{2} & 6 \end{bmatrix}$$

The bus voltages are

$$E_A = \begin{bmatrix} 1.1\underline{/30^\circ} \\ 1.1\underline{/120^\circ} \end{bmatrix}$$

$$E_C = \begin{bmatrix} 1.2\underline{/0^\circ} \\ 1.2\underline{/90^\circ} \end{bmatrix}$$

Compute the following:

a. The bus impedance matrix with ground as reference
b. The phase currents in each line

c. The ground current at bus B for a fault with the reactance

$$x_{0B} = \begin{bmatrix} 1 & 0 \\ 0 & \infty \end{bmatrix}$$

d. The fault voltages at buses A and B

Bibliography

Brown, H. E., C. E. Person, L. K. Kirchmayer, and G. W. Stagg: Digital Calculation of Three-phase Short Circuits by Matrix Method, *Trans. AIEE*, vol. 79, pt. III, pp. 1277–1281, 1960.

Byerly, R. T., R. W. Long, C. J. Baldwin, Jr., and C. W. King: Digital Calculation of Power System Networks Under Faulted Conditions, *Trans. AIEE*, vol. 77, pt. III, pp. 1296–1307, 1958.

Coombe, L. W., and D. G. Lewis: Digital Calculation of Short-circuit Currents in Large Complex-impedance Networks, *Trans. AIEE*, vol. 75, pt. III, pp. 1394–1397, 1956.

El-Abiad, Ahmed H.: Digital Calculation of Line-to-ground Short Circuits by Matrix Method, *Trans. AIEE*, vol. 79, pt. III, pp. 323–332, 1960.

El-Abiad, A. H., Ruth Guidone, and G. W. Stagg: Calculation of Short Circuits Using a High-speed Digital Computer, *Trans. AIEE*, vol. 80, pt. III, pp. 702–707, 1961.

Lantz, Martin J.: Digital Short-circuit Solution of Power System Networks Including Mutual Impedance, *Trans. AIEE*, vol. 76, pt. III, pp. 1230–1235, 1957.

Rindt, L. J., and R. W. Long: New Short Circuit Program Provides Many Automatic Features, *IEEE Proc. Power Ind. Computer Appl. Conf., Phoenix, Ariz.*, pp. 167–188, 1963.

Siegel, J. C., and G. W. Bills: Nodal Representation of Large Complex-element Networks Including Mutual Reactances, *Trans. AIEE*, vol. 77, pt. III, pp. 1226–1229, 1958.

Taylor, G. E., G. K. Carter, and E. H. MacDonald: New Digital Computer Short-circuit Program for Relay Studies, *Trans. AIEE*, vol. 79, pt. III, pp. 1257–1264, 1960.

Toalston, Argil L.: Digital Solution of Short-circuit Currents for Networks Including Mutual Impedances, *Trans. AIEE*, vol. 78, pt. IIIB, pp. 1720–1725, 1959.