محاضرة الدكتور/ حسنـــى بدوى

تحليل عناصر ومراحل التشييد

(4)

CPAS Lecture: 27 April 1994 Dr Hosni BADAWI

DESIGN PHASE ANALYSIS:

الدخل لتنظيم عمليات التشييد تحليل مرحلة التصميم

Elements of A/E Consultants Management: any system of management = أي نظام ادارة يتكون من

Organisation + **Planning** + **Operations** + **Controls**

التنظيم التخطيط العمليات الرقابة والاشراف

1. **ORGANISATION:** Conventional levels of management:

1.1 **Tri & Pentagon Relationships:** Owner / Archit-Engs / Contractor or CM

Architct's Contracts & %Fees: Right of author-cont docs-supervisn / Cost- plus.

Owner's Role : Land aquisn-Faisilility-Financing-Legal aspects-Consultants

Architct's Role: Owner- Dsgn/Prod -St/Mec.eng - Proj mngr (costing)- Site analysis

Contrctr's Role: Owner - Arch/Eng - Financing - Cost/Time contl - Site Opertin

CM Contract : Owner- Arch/Eng - Cost/Time contl -Tenderings- Site Opertin

1.2 **Main Organisation of consultant's Office:** Legal Setup, Sole, Type of partnership

1 Chairmn Partners	2 Design Dept	3 Spec-Writer Dept	4 Productn WD Dept/Catalogs	5 Models Shop	6 Costing/ Schedul	7 Proj-mngr Site Rel	8 Filings &Drwgs	9 Accountg &Clerical
- Dept Heads	- DEPARTMT	- SPEC WRITERS	- PROJ-ARCHITECTS	- MODELING	- MARKET PR	- Q-TAKE OFF	- LIBRARY	- ADM DEPT
- ADM (WP)	- NGH DEPT	- CATALOGS/MAT	- JOB CAPTAINS	- PRINTING OZALID	- COST INDEX CARDS	- COSTING	- ARCHIV	- OFFICE WORK (WP)
- ACCOUNTG	- OWNERS CONTACT	- DBASE SPECS	- TEAMS-CHIEF DRA	- PRINTING PLOTTER	- CPM SHED	- ESTIMATING	- DRWGS	- SECRETARIAT
- LEGAL	- PARTNER IN CHARGE	- COORD W/DESIGN	- COMPUTER CAD	- LAZER CUTTER	- UPDATING	- SITE SUPERV	- OPER FILES	- ACCOUNTG DEPT
- PROJ-MNGR		- COORD W/PROD	- MATL SPECIMEN		- OVERTIME	- OK CHANG-ORDER	- DEAD FILES	TIME-SHEETS
		- LIBRARY BY TYPE	- CATALOGS (SHEET)			- JOB MEETINGS	- COMPUTER STORAGE	- FINANCING
						- COORD: DES/PROD		

2. **PLANNING of DESIGN PHASES:** تخطيط مرحلة التصميم :

10 Office Planning	11 Market-price Estimating	12 Real-Estate Appraisl-NPV	13 Design-Cpm Schedulg	14 Stndrd detailg & Specs DB	15 Cost-Time Effectivenes	16 Financing Invoicing
- DEPTMENTL	- ALLOCATE PERSONL	- WHEN Y NEEDIT	- CPM of DESIGN	- STAND DETAILS	- COST VERS FEES	- SHARES OF PARTNRS
- STAFF REGUL	- PROJECT HOURS	- REMOVL/REUSE PREMISES	- UPDATE-(FLOAT)	- STAND DBASE SPECS	- TIME VERS CPM	- LOANS INTIRIM
- HIRING POLICY	- WORK SHEET	- LAND APPRAISL	- CLIENT CONTACT & APPROVL	- CHOOS - RETRIEV	- FEED BACK TO INDEX CARD	- CLIENT'S INVOICE BILLS
- MEETG of BOARD	- BUDGETING	- PRIME LOCATION	- COORD. MINUTE TO ENGS	- DBMS	- HOURS RATES & RANKS	- RETAINER & % FEES
- STRATEGIES	- EQUITIES	- CAPITULISATN				- OKEY STATEMT BILLS
- CONGRES/Contact		- NPV				

3. **OPERATION PHASES:** عمليات مرحلة التصميم :

17 Faisibilty Studies	18 Pre- design NBC-FM-Byl	19 Schematic dsgn Engs-Coord-Appv	20 Design development Details-Cats-Specs	21 Contract-docs Dwgs-Cct-BQ	22 Call-Tenders Addum-Award
- MARKET STUDY	- SITE ANALYSIS TOPORZON TRAPEDAX VIS IMPACT	- DESIGN CONCEPT	- PREP OUTLINE SPECS	- HVAC COORD	- CLOSED or PUBLIC
- ECONOMIC FAISIDLTY CAPITAL/INC	- NBC + BYLAWS	- PRESENTATIONS	- MINUTES TO ENGS.	- STR/MEC COORD	- ADDENDUMS
- TECH FAISIDLTY	- FIRE MARSHAL	- LOOPING & UPDATE	- INITIAL CONT PLANG DPT	- COST ANALYSIS	- INSTRUCTION TO BIDDERS
- MARKETING	- MATRIX/BUBBLE	- SOIL INVESTIGATN GEOTECHNIC	- PRESENTATION/REVIEW	- SPECS DEFIND	- STAMPED ENVELOPS + BONDS
	- CONCEPT	- COMMENTS/LOOPING	- COORD PRELIMS & REVIEW SITE UTILITIES	- BLDG PERMIT	- OPEN ENVELOPS DATE
		- ACCEPTANCE	- NOTICE TO START	- FINAL CONTR-DOCS DWG + BQ + CONTRACT + GEN CONDITIONS - AS IS DRWGS	- CORPS PRICE TAKEOFF
					- WINNER/TENDER AWARDS

4. **CONTROLS:** الرقابة على عمليات التصميم :

23 OFFICE LOGS	24 TIME-CONTROL	25 COST CONTROL	26 WORKMANSHIP CONTROL
Reports/Minutes	Weekly compare timing	Work executd cost-	Consultants' supervision :
Board's Decision	Pregress work versus	versus income fees.	Arch + Str.Eng+Mech Eng
Job meeting coord	planned Schedule- Lag	Cost-index-cards ( )-	Client's resident technician,
Proj-mngt(Contr-doc	Resource-leveling- over-	Escalation factors-	Construction standards in
+layout+Chg-orders)	timing using float-times	Control logistics	details, specs & workmanshp

بسم الله الرحمن الرحيم

CPAS Lecture: 17 April 1994 Dr Hosni BADAWI

CONSTRUCTION PHASES ANALYSIS:
تحليل عناصر ، ومراحل التشييد

1. **Elements of Construction Management:** any system of management = يتكون من
Organisation + **Planning** + **Operations** + **Controls**
التنظيم التخطيط العمليات المتابعة والتحكم

1.1 **Main Organisation of construction field:** تنظيم مواقع التشييد

Mangmt	Adminis	Labor	Concretng	Shops	Temporary
CM	clerical	Trade gangs	Batch plant	Storekeeper	Tilt-plant
Supervsrs	Payroll	Foremen	Mix-design	Rebar workshp	Tmp bldg
Surveyor	Purchase	Subs -Equip.	T-Crane loc	Forms workshp	Open St

1.2 **PLANNING of CONSTRUCTION PHASES:** تخطيط مراحل التشييد

Site-book	Define Constr-	Prepare CPM	Transmital forms:
Site-map	method	Lbr-opt/Duration	client/contrctr/consult
Contract-Docs	Site work	Meeting reports	Change-orders

1.3 **OPERATION PHASES :** according to logic Egyptian activity-scheduling: عمليات التشييد

Permits/Bonds
BM to Site-Repere
Borings - Equipmts
Bartars-Batch plant
Purchg-Subcontrtg

Substructure: piling/ footings/ necks/ retaing-walls
Ground beams - Pumping water
Insulation-Backfill-CI piping+MH-
Slab on grade -Erect Tilt-plant

Superstructure: ركيزانه
A) Cast-in-place: Lattice shuttering-Metalic forms- Tunnel shutterng-Plate or flat slab-Half pc slab Gable climbing shuttering
B) Precast Panels or Components: Joints fixing- Premauldd membrane Caulking & water stops-Texture. Top-concrete troweld-Flooring types-Exter-Masonry-Partition/Dry-walls Manufac/fix door-window-Metal Wrk. Built-up roofing-Hoppers-Suctn-fans.
C) Mechanical: Plumbing - Electrl - A/C - air handling units - Elevators.
D) Finishing: Sanitary & electrical fixtures - Paintings - Cleaning.

Communication: Transmital Forms - Change orders - Statement bills - Shop-drwgs - As is drawings - Terms of General Conditions.

1.4 **CONTROLS :** المتابعة والتحكم والاشراف

SITE LOGS	TIME-CONTROL	COST CONTROL	WORKMANSHIP CONTROL
Dialy reports	Weekly compare timing	Work executd cost-	Consultants' supervision :
Site instruction Bk	Pregress work versus	versus contract cost	Arch + Civil Eng + Mech Eng
Job meeting coord	planned Schedule- Lag	Cost-index-cards ( )-	Client's resident technician -
Site-book(Contr-doc	Resource-leveling- over-	Escalation factors-	Construction standards
+layout+Chg-orders)	timing using float-times	Control logistics	and ethics.

2. **CASE STUDY:** Animal-food Plant Project: see the site-layout sketch:
Two groups of Silos - The make-up building - The chemical building - Mechanical pumpsIsuctiom Laboratory & storage- Administration building .

STUDY-CASE : INDUSTRIAL CANNED FOOD PLANT

PLANT LAYOUT SCALE 1/2500

Permanent building blocks

Temperory building facilities

Row Material on site

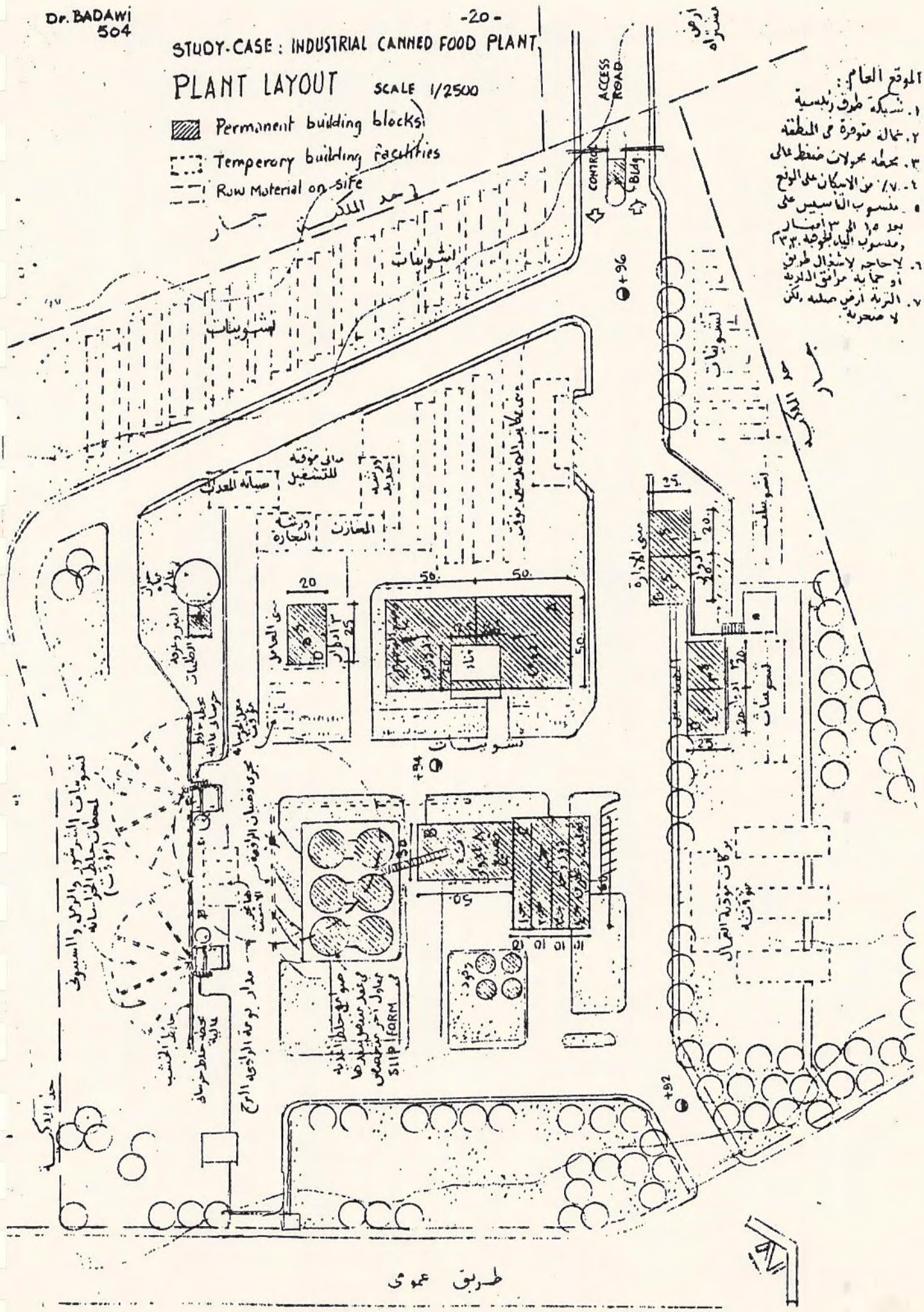

الموقع العام:

١. شبكة طرق رئيسية
٢. خدمات متوفرة في المنطقة
٣. محطة محولات ضغط عالي
٤. ٧٠٪ من الامكان على الوضع
٥. منسوب الماسبيس على بعد ١٥ الى ٣٠ امتار ومنسوب المياه الجوفية ٣٣٠م
٦. لا حاجة لاشغال طريق او حماية مرافق الدولة
٧. التربة ارض صلبة لكن لا صخرية

طريق عمومي

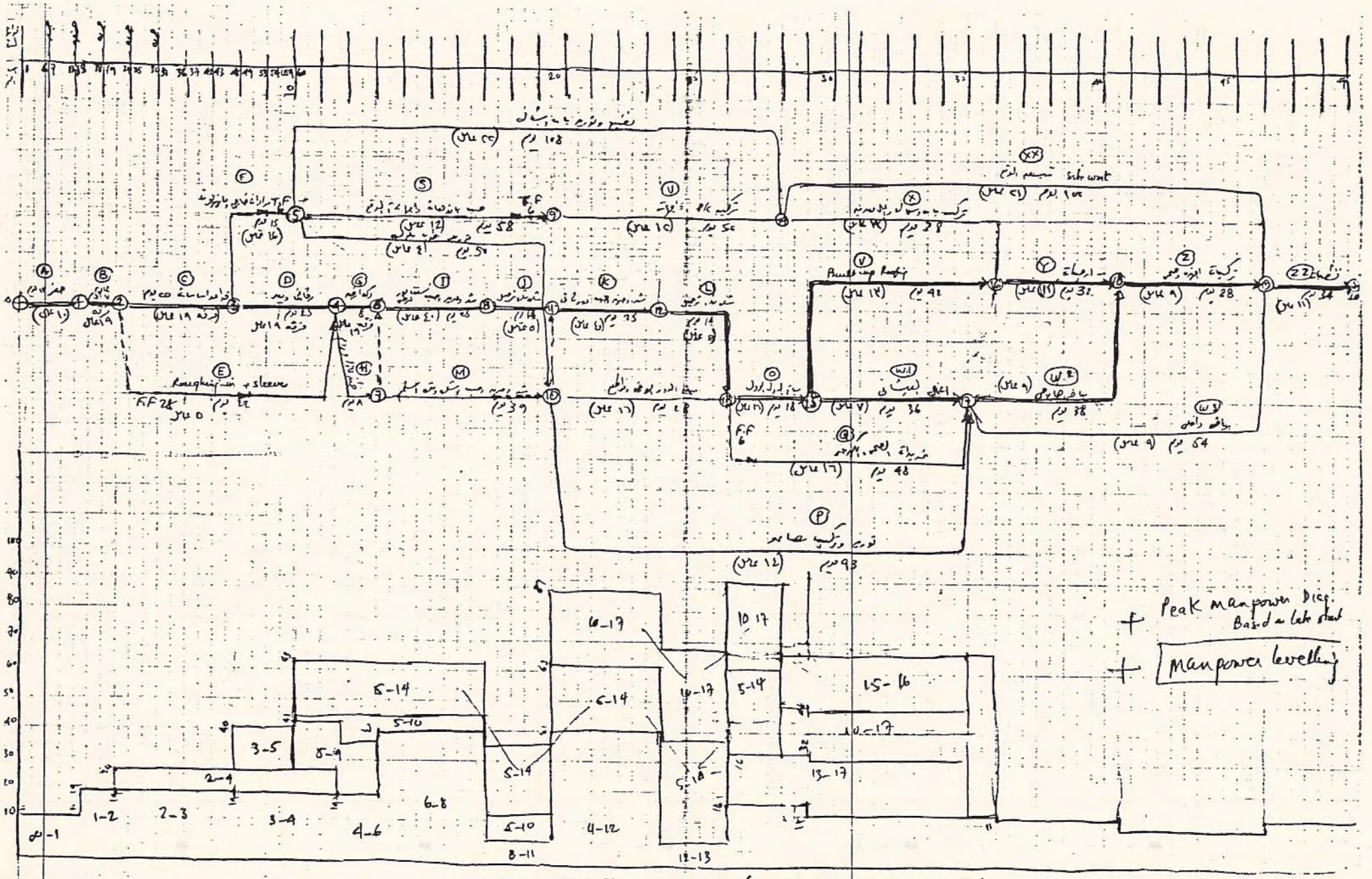

PEAK MANPOWER DIAGRAM (BASED ON EARLY STARTS)

مذكرات د/حسني بدوي : ادارة المشروعات

توابع المقوم

ايام العمل طبقا للعدالات

10 WE

24 WE

FEASIBILITY

BUDJET

PREDESIGN (or Programming Phase)

Durations DEPEND ON SKILL IN DATA GATHERING ANALYSIS, SYNTHESIS, CONCLUSIONS

SCHEMATIC DESIGN (CONCEPT)

DURATIONS DEPEND ON OFFICE EFFECTIVENESS : SKILLS + MANPOWER + office EQUIPMENTS (COMPUTERIZATION & off MACHINES)

OUTLINE PROPOSAL: (OWNER APPROVE FAISIBILITY & BUDJET ON HIS STAFF) (ALTERNATIVES)

CITY HALL DATA/CONSTRAINT

BLDG CODE/ZONING

ENVIRON'L/ DEMOGRA. STUDIES

ARCH. DEFIN GOALS & CRITERIA

ACTIVITY ANALYSIS

FUNCTION'L RELATIONSHIP

REVIEW DATA

SPACE PROGRAM'G ANALYSIS

SITE ANALYSIS

IF PERF. MANG'T CONTRACT, THEN SELECTION OF SUPPA PROJECT MANAGER WHERE FAST TRACK: DESIGN & CONSTR OVERLAPING

FACILITY PROGRAMM'G

REVIEW FAC. PROGR.

BID/AWARD BORING CONTR. GEOTECHNIC

CONCEPT

SOIL MECHANIC LAB REPORT

SCHEMATIC DESIGN PRESENTATION

REVIEW SCH/D.

SCH/DES COMMENT

COMMENTS INCORPORATION ELEMENTS

REPRESENT SCH. DESIGN

INITIAL CONTACT FOR "ZONING" PLAN'G DEPT.

VERIFY COMPLIANC. W. CODES

FINAL SCHEMAT. DESIGN

ACCEPTED

YES

NO

SCH. DESIGN LOOP

PROBLEM SEEKING : TEST GOALS + DATA + POLICY AGAINST : FUNCTION + BASE CRITERIA + NEEDS + FIRM + BUDJET + TIME

ACQUIRE SITE SURVEY BY MUNICIPAL or PRIVATE SURVEYOR

MEETING & MINUTES MUNICIPALITY ZONING CODES

OWNER: APPROVES ARCH. SELECTION OF CONSULTANTS

PRELIMINARY CONSULTANTS COORDINATION

ARCH. SUBMIT MINUTES OF PRESEN

FINAL MANHOURS SUBMITTAL SHEET

ARCH SUBMITS OFFICE WORK PLAN + SCHEDULE OF DELIVERY + MANPOWER CHART + MANHOUR DESTRIBUTION PER DISCIPLINE + SCHEDULE OF RECOVERABLE EXPENSES

ARCH INVOICES FOR RETAINER, FOLLOWED BY MONTHLY PROGRESS INVOICES.

BY:
Dr. HOSNI BADAWI
Professor of Project Management.

(GOALS: POTENTIALITY, MISSION, FEASIBILITY) + (DATA FACTS: STATISTICAL, URBAN CONTEXT, CONSTRAINT) + (BASE CRITERIA: FUND. CONCEPT, PERFORMANCE, ANALYSIS + RELATIONSHIP) + (NEEDS: SPACE STAND. REQ., BUDGET ANALYSIS, OUTDOOR REQ.) + (POLICY STATEMENT: DESIGN & OPER. PROBLEMS BEFOR SCH. DESIGN)

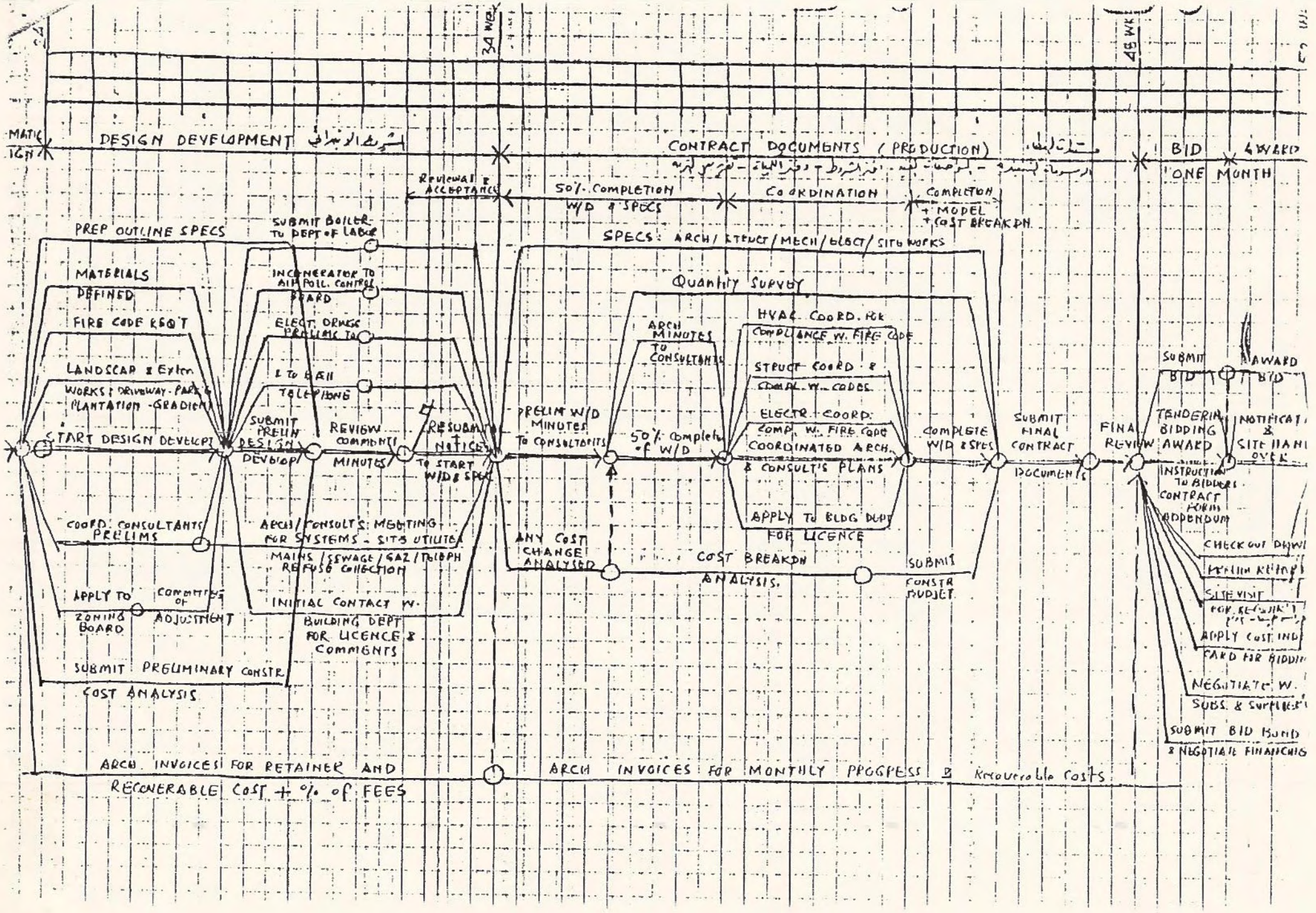
34 WK
48 WK
DESIGN DEVELOPMENT
CONTRACT DOCUMENTS (PRODUCTION)
BID
AWARD
ONE MONTH
REVIEW & ACCEPTANCE
50% COMPLETION W/D & SPECS
CO ORDINATION
COMPLETION + MODEL + COST BREAKDN.
PREP OUTLINE SPECS
SUBMIT BOILER TO DEPT OF LABOR
SPECS: ARCH/STRUCT/MECH/ELECT/SITE WORKS
MATERIALS DEFINED
INCINERATOR TO AIR POLL. CONTROL BOARD
Quantity Survey
FIRE CODE REQ'T
ELECT. DRWGS PRELIMS TO
ARCH MINUTES TO CONSULTANTS
HVAC COORD. FOR COMPLIANCE W. FIRE CODE
LANDSCAP & Extern WORKS: DRIVEWAY - PARK & PLANTATION - GRADING
E TO BELL TELEPHONE
STRUCT COORD & COMPL. W. CODES
SUBMIT
AWARD
START DESIGN DEVELOPT
SUBMIT PRELIM DESIGN DEVELOP
REVIEW COMMENTS MINUTES
RESUBMIT NOTICE TO START W/D & SPEC
PRELIM W/D MINUTES TO CONSULTANTS
50% Complete of W/D
ELECTR. COORD. COMPL. W. FIRE CODE
COMPLETE W/D & SPECS
SUBMIT FINAL CONTRACT DOCUMENTS
FINAL REVIEW
TENDERING BIDDING AWARD
NOTIFICAT & SITE HANDOVER
COORD. CONSULTANTS PRELIMS
ARCH/CONSULT'S MEETING FOR SYSTEMS - SITE UTILITIES
COORDINATED ARCH. & CONSULT'S PLANS
INSTRUCTIONS TO BIDDERS CONTRACT FORM ADDENDUM
APPLY TO BLDG DEPT FOR LICENCE
ANY COST CHANGE ANALYSED
MAINS/SEWAGE/GAZ/TELEPH REFUSE COLLECTION
COST BREAKDN ANALYSIS
SUBMIT CONSTR BUDGET
CHECK OUT DRWG
APPLY TO ZONING BOARD
COMMITTEE OF ADJUSTMENT
INITIAL CONTACT W. BUILDING DEPT FOR LICENCE & COMMENTS
SITE VISIT
APPLY COST IND
SUBMIT PRELIMINARY CONSTR. COST ANALYSIS
NEGOTIATE W. SUBS. & SUPPLIERS
SUBMIT BID BOND & NEGOTIATE FINANCING
ARCH. INVOICES FOR RETAINER AND RECOVERABLE COST + % of FEES
ARCH INVOICES FOR MONTHLY PROGRESS & Recoverable Costs

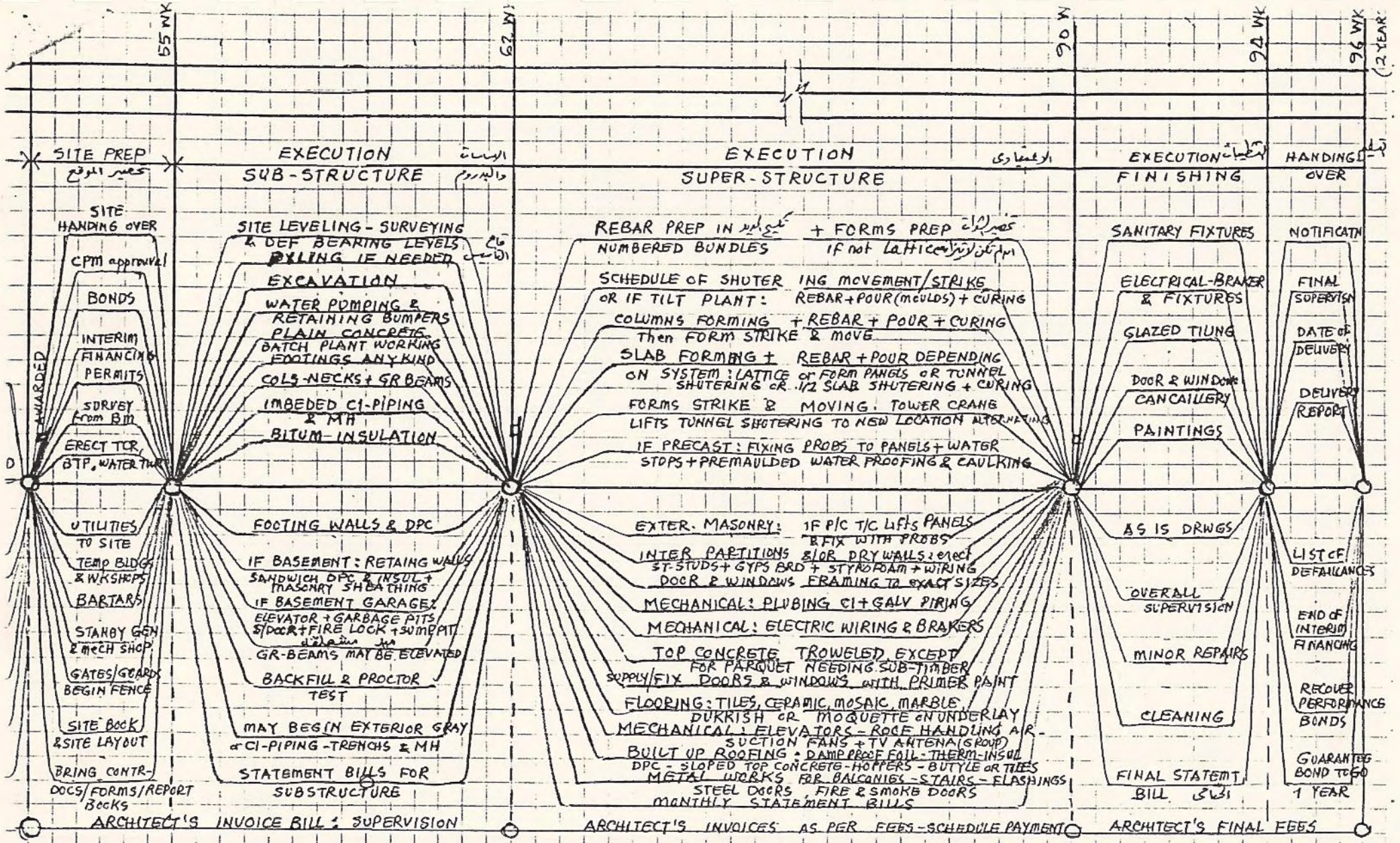
55 WK
62 WK
90 WK
94 WK
96 WK
(2 YEAR)
SITE PREP
EXECUTION
SUB-STRUCTURE
EXECUTION
SUPER-STRUCTURE
EXECUTION
FINISHING
HANDING OVER
SITE HANDING OVER
CPM approval
BONDS
INTERIM FINANCING
PERMITS
SURVEY from BM
ERECT TCR, BTP, WATER TWR
AWARDED
SITE LEVELING - SURVEYING
& DEF BEARING LEVELS
PILING IF NEEDED
EXCAVATION
WATER PUMPING &
RETAINING BUMPERS
PLAIN CONCRETE
BATCH PLANT WORKING
FOOTINGS ANY KIND
COLS-NECKS + GR BEAMS
IMBEDED CI-PIPING & MH
BITUM-INSULATION
REBAR PREP IN + FORMS PREP
NUMBERED BUNDLES
IF not LATTICE
SCHEDULE OF SHUTERING MOVEMENT/STRIKE
OR IF TILT PLANT: REBAR+POUR(MOULDS) + CURING
COLUMNS FORMING + REBAR + POUR + CURING
Then FORM STRIKE & MOVE
SLAB FORMING + REBAR + POUR DEPENDING
ON SYSTEM: LATTICE or FORM PANELS OR TUNNEL
SHUTERING OR 1/2 SLAB SHUTERING + CURING
FORMS STRIKE & MOVING. TOWER CRANE
LIFTS TUNNEL SHUTERING TO NEW LOCATION
IF PRECAST: FIXING PROBS TO PANELS + WATER
STOPS + PREMAULDED WATER PROOFING & CAULKING
SANITARY FIXTURES
ELECTRICAL-BRAKER & FIXTURES
GLAZED TIUNG
DOOR & WINDOWS
CANCAILLERY
PAINTINGS
NOTIFICATN
FINAL SUPERVISN
DATE OF DELIVERY
DELIVERY REPORT
UTILITIES TO SITE
TEMP BLDGS & WKSHOPS
BARTARS
STANBY GEN & MECH SHOP
GATES/GEARDS BEGIN FENCE
SITE BOOK & SITE LAYOUT
BRING CONTR-DOCS/FORMS/REPORT BOOKS
FOOTING WALLS & DPC
IF BASEMENT: RETAING WALLS
SANDWICH DPC & INSUL + MASONRY SHEATHING
IF BASEMENT GARAGE:
ELEVATOR + GARBAGE PITS
S/DOOR + FIRE LOCK + SUMPPIT
GR-BEAMS MAY BE ELEVATED
BACKFILL & PROCTOR TEST
MAY BEGIN EXTERIOR GRAY
or CI-PIPING - TRENCHS & MH
STATEMENT BILLS FOR SUBSTRUCTURE
EXTER. MASONRY: IF P/C T/C LIFTS PANELS & FIX WITH PROBS
INTER PARTITIONS &/OR DRY WALLS: erect
ST-STUDS + GYPS BRD + STYROFOAM + WIRING
DOOR & WINDOWS FRAMING TO EXACT SIZES
MECHANICAL: PLUBING CI + GALV PIPING
MECHANICAL: ELECTRIC WIRING & BRAKERS
TOP CONCRETE TROWELED EXCEPT FOR PARQUET NEEDING SUB-TIMBER
SUPPLY/FIX DOORS & WINDOWS WITH PRIMER PAINT
FLOORING: TILES, CERAMIC, MOSAIC, MARBLE, DUKKISH OR MOQUETTE ON UNDERLAY
MECHANICAL: ELEVATORS - ROOF HANDLING AIR - SUCTION FANS + TV ANTENA (GROUP)
BUILT UP ROOFING: DAMP PROOF FOIL - THERM-INSUL
DPC - SLOPED TOP CONCRETE - HOPPERS - BUTYLE OR TILES
METAL WORKS FOR BALCONIES - STAIRS - FLASHINGS
STEEL DOORS, FIRE & SMOKE DOORS
MONTHLY STATEMENT BILLS
AS IS DRWGS
OVERALL SUPERVISION
MINOR REPAIRS
CLEANING
FINAL STATEMT BILL
LIST OF DEFAULTANCES
END OF INTERIM FINANCING
RECOVER PERFORMANCE BONDS
GUARANTEE BOND TO GO 1 YEAR
ARCHITECT'S INVOICE BILL: SUPERVISION
ARCHITECT'S INVOICES AS PER FEES-SCHEDULE PAYMENT
ARCHITECT'S FINAL FEES